MACHINE SCREW JACKS

Joyce offers Machine Screw Jacks in several designs including:

- **Translating**
- **Keyed for non-rotation**
- **Keyed for traveling nut (KFTN)**
- **Double clevis**
- **Trunnion**

A guide for ordering is on pages 20 and 21.

MACHINE SCREW JACKS ORDERING INFORMATION

Instructions: Select a model number from this chart.

Miniature	1-Ton	2-Ton	2-Ton Reverse Base	3-Ton	5-Ton	10-Ton	15-Ton	20-Ton
WJ250 WJ500* WJ1000	WJ51 WJ201	WJT62 WJT122 WJT242 WJT252	RWJT62 RWJT122 RWJT242 RWJT252	WJ63 WJ123 WJ243 WJ253	WJT65 WJT125 WJT245 WJT255	WJ810 WJ2410 WJ2510	WJ815 WJ2415 WJ2515	WJ820 WJ2420 WJ2520
		DWJ62* DWJ122* DWJ242*	DRWJ62* DRWJ122* DRWJ242*	DWJ63* DWJ123* DWJ243*	DWJ65* DWJ125* DWJ245*	DWJ810* DWJ2410*	DWJ815* DWJ2415*	DWJ820* DWJ2420*
25-Ton	**30-Ton**	**35-Ton**	**50-Ton**	**50-Ton Reverse Base**	**75-Ton**	**100-Ton**	**150-Ton**	**250-Ton**
WJ1125 WJ3225	WJ1130 WJ3230	WJ1135 WJ3235	WJT1150 WJT3250	RWJT1150 RWJT3250	WJ1175 WJ3275	WJ12100 WJ36100	WJ12150 WJ36150	WJ50250
DWJ1125* DWJ3225*	DWJ1130* DWJ3230*							

Important Note: *Not self-locking, may lower under load. Brake motors or external locking systems are recommended.

D: Double Lead Screw

R: Reverse Base Jack, (only available on 2-ton and 50-ton jacks).

Sample Part Number: WJT65U1N-18.50-STDX-STDX-B

Jack Configuration

U=Upright

I=Inverted

End Conditions

1=T1
(plain end)

2=T2
(load pad)

3=T3
(threaded end)

4=T4
(male clevis)

Left Side Shaft Code

(see below)

XXXX=Remove
STDX=Standard
CUST=Custom

For optional shaft codes, see page 21.

Right Side Shaft Code

(see below)

XXXX=Remove
STDX=Standard
CUST=Custom

For optional shaft codes, see page 21.

Machine Screw Jack Rise

Rise is travel expressed in inches and not the actual screw length.

Additional Options*

X=Standard Jack, no additional options

S=Additional Specification Required (comment as necessary)

Anti-Backlash p. 181
A=Split Nut
A90=A90 Design
A95=A95 Design

Protective Boots pp. 170-173
B=Protective Boot
D=Dual Protective Boot

Finishes p. 182
F1=Do Not Paint
F2=Epoxy Paint
F3=Outdoor Paint Process

Motor Options
M1=Less Motor
M2=Brake Motor
M3=Single Phase Motor (120VAC)
M4=50Hz Motor
M5=Special Motor

Grease/Seals
H1=High Temperature Operation
H2=Food Grade

Screw Stops
ST0=Extending
ST1=Retracting
ST2=Both

* Specify as many options as needed

Jack Designs

S=Translating

K=Keyed for Non Rotation

N=Traveling Nut

D=Double Clevis

A=KFTN Trunnion*
T=Trunnion*

*Standard trunnion mounts available on 2-ton through 20-ton jacks. (See page 183)

MACHINE SCREW JACKS SHAFT CODES

Instructions: Select the appropriate shaft codes for both right and left hand shafts. One shaft code must be specified for each side of the jack.

Screw Stops (p. 10) and Boots (pp. 170-173)

Screw stops are optional on machine screw jacks. When specified, the closed height of the jack and/or the protection tube length may be increased.

When boots are added to machine screw jacks, the closed height of the jack may be increased.

Mechanical Counters (p. 180)

CNT0=0.001" Increments

Note: Contact Joyce for availability and options.

Hand Wheels (p. 180)

HW04=4" dia

HW06=6" dia

HW08=8" dia

HW10=10" dia

HW12=12" dia

Recommended for self-locking jacks only.

Geared Potentiometers (p. 175)

POTA=0-10V

POTB=4-20mA

POTC=0-10V w/2 switches

POTD=4-20mA w/2 switches

IP65 rated enclosures

Encoders (pp. 176-177)

ENCA=Absolute Encoder 0-10 VDC, programmable

ENCB=Absolute Encoder 4-20mA, programmable

ENCC=Absolute Encoder CAN Open

ENCD=Absolute Encoder SSI

ENCS=Stainless Steel Incremental Encoder 1024 PPR

ENCX=Incremental Encoder 200 PPR

ENCY=Incremental Encoder 1024 PPR

Motors for Systems and Direct Drives (pp. 178-179)

- All standard motors are 3-phase, 208-230/460 VAC or 230/460 VAC. Other motor options are available. Specify the appropriate motor size from the chart on the right.
- Refer to the "Additional Options" chart on the preceding page as needed.
- Brake motors (M2) are recommended for jacks that are not self-locking, and jacks with double lead screws.
- If the motor frequency will be varied to provide a "soft" start an inverter duty motor may be required.

Motors

Size	Code
1/4 HP	K
1/3 HP	A
1/2 HP	B
3/4 HP	C
1 HP	D
1-1/2 HP	E
2 HP	F
3 HP	L
5 HP	G
7-1/2 HP	H
10 HP	I
15 HP	J

Motor Mounts (pp. 178-179)

Ordering Example:

MMA A

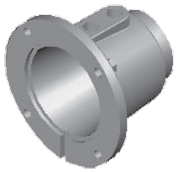

MMA=56C

MMB=140TC

MMC=180TC

MMD=210TC

Motor code from chart at left

For servo motor mounts see p. 178

Standard motor adapters are aluminum.

Mechanical Limit Switches (p. 174)

Ordering Example: LA13

Models

Model	Code
LS7-402	LI
LS8-402	LA
LS8-404	LB

Number of DPDT Switches (see p. 174)

NOTE: Will always be 0 for LS7 models

Available Positions

	1	2*	3	4	5	6*	7	8
Left Side Shaft Options								
Right Side Shaft Options								

- 2, 3, 5, 10, 15, and 20 ton jacks are available with positions #1, #3, and #5
- 25, 30, 35, 50, 75, 100, and 150 ton jacks are available with positions #1, #4, #7, and #8

*These positions are not standard. Contact Joyce with your requirements.

MACHINE SCREW JACKS SPECIFICATIONS

Model	Capacity	Screw Diameter (Inches)	Thread Pitch/Lead	Worm Gear Ratio	Worm Shaft Turns for 1" Travel	Tare Torque (Inch Lbs.)	Starting Torque (Inch Lbs.)	Operating Torque (Inch Lbs.)	Efficiency Rating % Approx.	Screw Torque (Inch Lbs.)	Basic Jack Weight (Lbs.)	Jack Weight per Inch Travel (Lbs.)
WJ250	250 lbs.	1/2	.125 pitch STUB ACME	5:1	40	1	.025W*	.018W* @ 500 RPM	23.0	.050W*	1.2	0.1
WJ500	500 lbs.	5/8	.125 pitch .250 lead STUB ACME	5:1	20	1	.041W*	.030W* @ 500 RPM	27.2	.079W*	1.3	0.1
WJ1000	1,000 lbs.	5/8	.125 pitch STUB ACME	5:1	40	1	.030W*	.021W* @ 500 RPM	19.9	.059W*	1.3	0.1
WJ51	1 ton	3/4	.200 pitch ACME 2C	5:1	25	3	.038W*	.026W* @ 500 RPM	25.0	.075W*	6	0.3
WJ201				20:1	100		.017W*	.009W* @ 500 RPM	15.9			
(R)WJT62	2 ton	1	.250 pitch ACME 2C	6:1	24	4	.041W*	.028W* @ 500 RPM	24.2	.098W*	15	0.3
(R)WJT122				12:1	48		.025W*	.015W* @ 500 RPM	22.0			
(R)WJT242				24:1	96		.018W*	.009W* @ 500 RPM	18.3			
(R)WJT252				25:1	100		.015W*	.0085W* @ 500 RPM	17.0			
D(R)WJ62			.250 pitch .500 lead ACME 2C	6:1	12		.057W*	.039W* @ 500 RPM	33.7	.139W*		
D(R)WJ122				12:1	24		.035W*	.022W* @ 500 RPM	30.5			
D(R)WJ242				24:1	48		.025W*	.013W* @ 500 RPM	25.4			
WJ63	3 ton	1	.250 pitch ACME 2C	6:1	24	6	.040W*	.029W* @ 500 RPM	24.3	.098W*	17	0.4
WJ123				12:1	48		.025W*	.016W* @ 500 RPM	22.2			
WJ243				24:1	96		.017W*	.009W* @ 500 RPM	18.5			
WJ253				25:1	100		.0155W*	.009W* @ 500 RPM	17.8			
DWJ63			.250 pitch .500 lead ACME 2C	6:1	12		.055W*	.041W* @ 500 RPM	33.8	.139W*		
DWJ123				12:1	24		.034W*	.022W* @ 500 RPM	30.7			
DWJ243				24:1	48		.024W*	.013W* @ 500 RPM	25.6			
WJT65	5 ton	1 1/2	.375 pitch STUB ACME	6:1	16	10	.065W*	.044W* @ 300 RPM	23.0	.151W*	32	0.7
WJT125				12:1	32		.041W*	.025W* @ 300 RPM	20.6			
WJT245				24:1	64		.029W*	.015W* @ 300 RPM	16.7			
WJT255			.250 pitch ACME 2C	25:1	100		.022W*	.011W* @ 300 RPM	13.4	.131W*		
DWJ65			.250 pitch .500 lead ACME 2C	6:1	12		.072W*	.050W* @ 300 RPM	26.8	.171W*		
DWJ125				12:1	24		.045W*	.028W* @ 300 RPM	23.9			
DWJ245				24:1	48		.033W*	.017W* @ 300 RPM	19.6			
WJ810	10 ton	2	.500 pitch ACME 2C	8:1	16	20	.061W*	.043W* @ 200 RPM	23.1	.195W*	43	1.3
WJ2410				24:1	48		.030W*	.018W* @ 200 RPM	18.8			
WJ2510			.250 pitch ACME 2C	25:1	100		.024W*	.014W* @ 200 RPM	11.3	.161W*		
DWJ810			.333 pitch .666 lead ACME 2C	8:1	12		.070W*	.062W* @ 200 RPM	31.9	.228W*		
DWJ2410				24:1	36		.035W*	.026W* @ 200 RPM	25.9			

Important Note: Series DWJ double lead screw jacks and WJ500 screw jacks are not self-locking. Brake motors or external locking systems are recommended.
(R): Reverse Base Jack.
***W:** Load in pounds.
Tare Torque: Initial torque to overcome seal and normal assembly drag. This value must be added to starting torque or operating torque values.
Starting Torque: Torque value required to start moving the rated load (dissipates to operating torque values once the load begins moving).
Operating Torque: Torque required to continuously raise a given load at the input RPM listed.
Note: If your actual input RPM is 20% higher or lower than the listed RPM, please refer to JAX® Online to determine actual torque values at your RPM.
Screw Torque: Torque required to resist screw rotation (Translating Design Jacks) and traveling nut rotation (Keyed for Traveling Nut Design Jacks).
Lead: The distance traveled axially in one rotation of the lifting screw.
Pitch: The distance from a point on a screw thread to a corresponding point on the next thread, measured axially.
Note: This chart is provided for reference only. For specific information such as column loading, allowable continuous travel and other performance factors please refer to JAX® Online software or contact Joyce.

MACHINE SCREW JACKS SPECIFICATIONS

Model	Capacity	Screw Diameter (Inches)	Thread Pitch/Lead	Worm Gear Ratio	Worm Shaft Turns for 1" Travel	Tare Torque (Inch Lbs.)	Starting Torque (Inch Lbs.)	Operating Torque (Inch Lbs.)	Efficiency Rating % Approx	Screw Torque (Inch Lbs.)	Basic Jack Weight (Lbs.)	Jack Weight per Inch Travel (Lbs.)
WJ815	15 ton	2 1/4	.500 pitch ACME 2C	8:1	16	30	.069W*	.047W* @ 200 RPM	21.1	.210W*	59	1.4
WJ2415				24:1	48		.036W*	.020W* @ 200 RPM	16.6			
WJ2515			.250 pitch ACME 2C	25:1	100		.026W*	.015W* @ 200 RPM	10.2	.178W*		
DWJ815		2 1/4	.333 pitch .666 lead ACME 2C	8:1	12		.079W*	.058W* @ 200 RPM	34.4	.244W*		
DWJ2415				24:1	36		.041W*	.025W* @ 200 RPM	27.0			
WJ820	20 ton	2 1/2	.500 pitch ACME 2C	8:1	16	40	.075W*	.051W* @ 200 RPM	19.6	.227W*	77	1.9
WJ2420				24:1	48		.039W*	.022W* @ 200 RPM	15.4			
WJ2520			.250 pitch ACME 2C	25:1	100		.029W*	.016W* @ 200 RPM	9.4	.194W*		
DWJ820		2 1/2	.375 pitch .750 lead ACME 2C	8:1	10.67		.088W*	.061W* @ 200 RPM	24.5	.272W*		
DWJ2420				24:1	32		.046W*	.026W* @ 200 RPM	19.3			
WJ1125	25 ton	3 3/8	.666 pitch Stub ACME	11:1	16	50	.088W*	.055W* @ 200 RPM	18.3	.313W*	164	3.1
WJ3225				32:1	48		.053W*	.025W* @ 200 RPM	13.5			
DWJ1125		3 3/8	.562 pitch 1.125 lead ACME 2C	11:1	9.5		.106W*	.067W* @ 200 RPM	25.1	.384W*		
DWJ3225				32:1	28.5		.063W*	.030W* @ 200 RPM	18.6			
WJ1130	30 ton	3 1/2	.666 pitch ACME 2C	11:1	16	60	.088W*	.055W* @ 200 RPM	18.3	.313W*	164	3.0
WJ3230				32:1	48		.052W*	.025W* @ 200 RPM	13.5			
DWJ1130		3 1/2	.5625 pitch 1.125 lead ACME 2C	11:1	9.5		.107W*	.067W* @ 200 RPM	25.1	.384W*		
DWJ3230				32:1	28.5		.064W*	.030W* @ 200 RPM	18.6			
WJ1135	35 ton	3 3/4	.666 pitch ACME 2C	11:1	16	70	.093W*	.057W* @ 200 RPM	17.4	.328W*	240	3.4
WJ3235				32:1	48		.055W*	.026W* @ 200 RPM	12.9			
(R)WJT1150	50 ton	4 1/2	.666 pitch ACME 2C	11:1	16	100	.095W*	.063W* @ 150 RPM	15.8	.378W*	387	6.1
(R)WJT3250				32:1	48		.050W*	.027W* @ 150 RPM	12.4			
WJ1175	75 ton	5	.666 pitch ACME 2C	11:1	16	155	.107W*	.067W* @ 150 RPM	14.8	.418W*	610	6.5
WJ3275				32:1	48		.056W*	.028W* @ 150 RPM	11.7			
WJ12100	100 ton	6	.750 pitch ACME 2C	12:1	16	205	.112W*	.072W* @ 90 RPM	13.9	.495W*	1010	10.0
WJ36100				36:1	48		.059W*	.031W* @ 90 RPM	10.8			
WJ12150	150 ton	7	1.00 pitch ACME 2C	12:1	12	300	.134W*	.084W* @ 90 RPM	15.7	.595W*	1350	12.2
WJ36150				36:1	36		.070W*	.037W* @ 90 RPM	12.1			
WJ50250	250 ton	9	1.00 pitch ACME 2C	50:1	50	500		.036W* @ 60 RPM	8.8	.711W*	3415	21.0

Important Note: Series DWJ double lead screw jacks and WJ500 screw jacks are not self-locking. Brake motors or external locking systems are recommended.
(R): Reverse Base Jack.
***W:** Load in pounds.
Tare Torque: Initial torque to overcome seal and normal assembly drag. This value must be added to starting torque or operating torque values.
Starting Torque: Torque value required to start moving the rated load (dissipates to operating torque values once the load begins moving).
Operating Torque: Torque required to continuously raise a given load at the input RPM listed.
Note: If your actual input RPM is 20% higher or lower than the listed RPM, please refer to JAX® Online to determine actual torque values at your RPM.
Screw Torque: Torque required to resist screw rotation (Translating Design Jacks) and traveling nut rotation (Keyed for Traveling Nut Design Jacks).
Lead: The distance traveled axially in one rotation of the lifting screw.
Pitch: The distance from a point on a screw thread to a corresponding point on the next thread, measured axially.
Note: This chart is provided for reference only. For specific information such as column loading, allowable continuous travel and other performance factors please refer to JAX® Online software or contact Joyce.

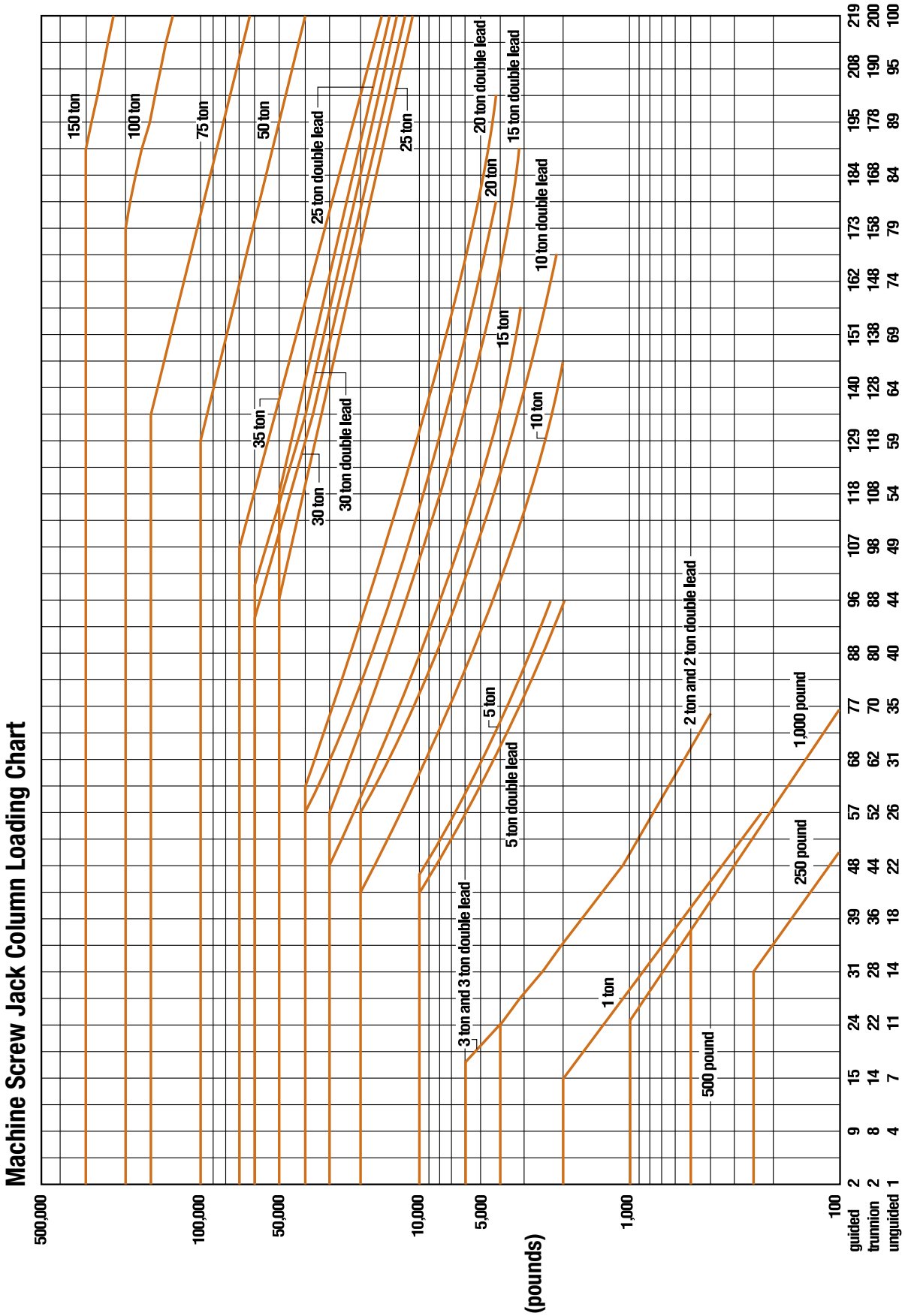

This chart includes a 2:1 Factor-of-Safety based on the Euler-Johnson equation for column loading (Oberg, Erik et al: Machinery's Handbook, 24th Edition. c. 1992 Industrial Press Inc.)
The horizontal portion of each line represents the jack's maximum dynamic capacity. Under static conditions, these lines can be exceeded. Please contact factory for assistance.

2D and 3D models available on website • Ordering information on pages 20 and 21

MACHINE SCREW JACKS

250 POUND - 1/2" SCREW

WJ 250

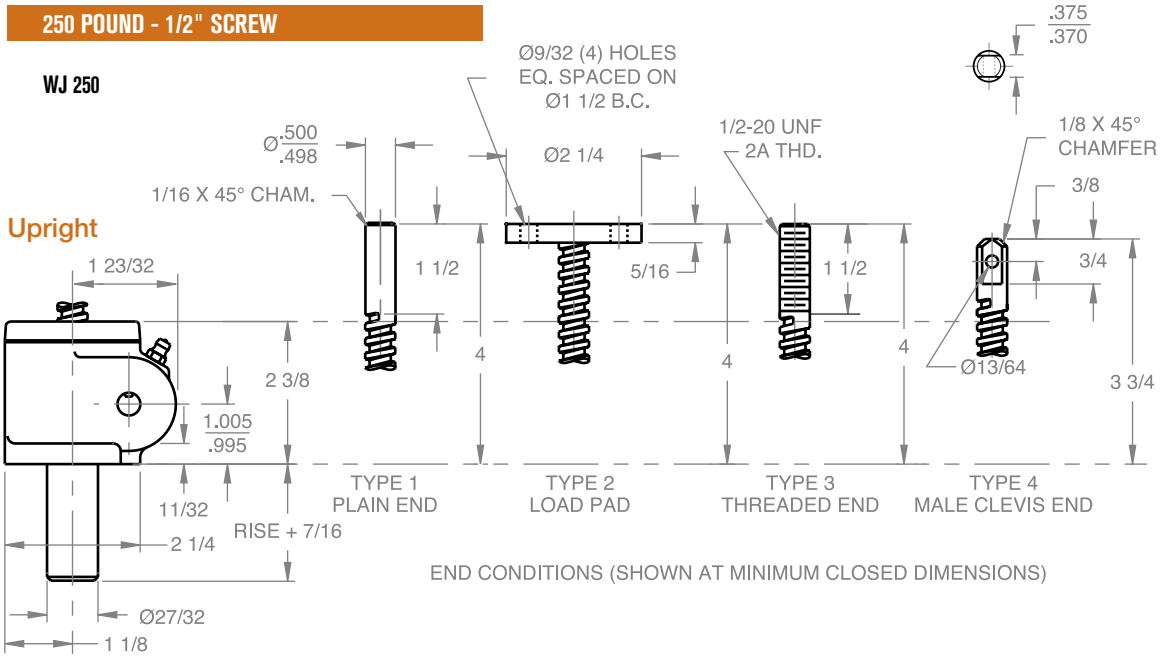

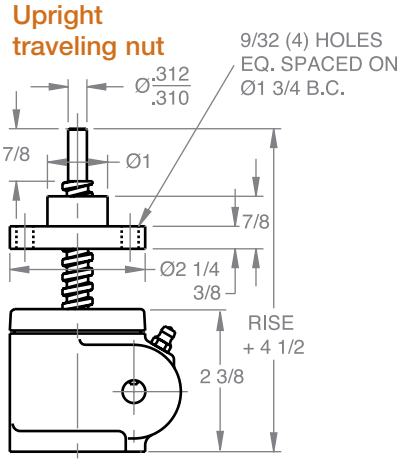

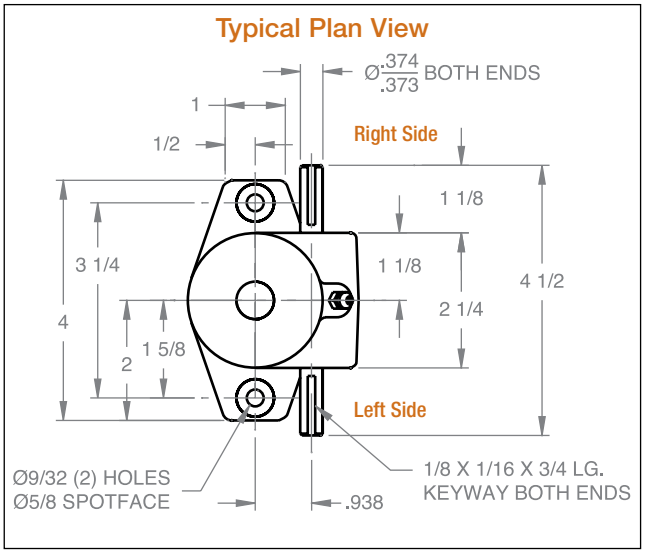

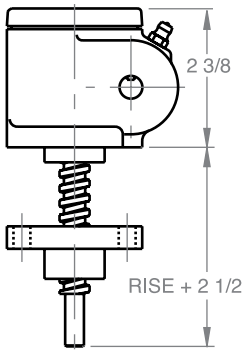

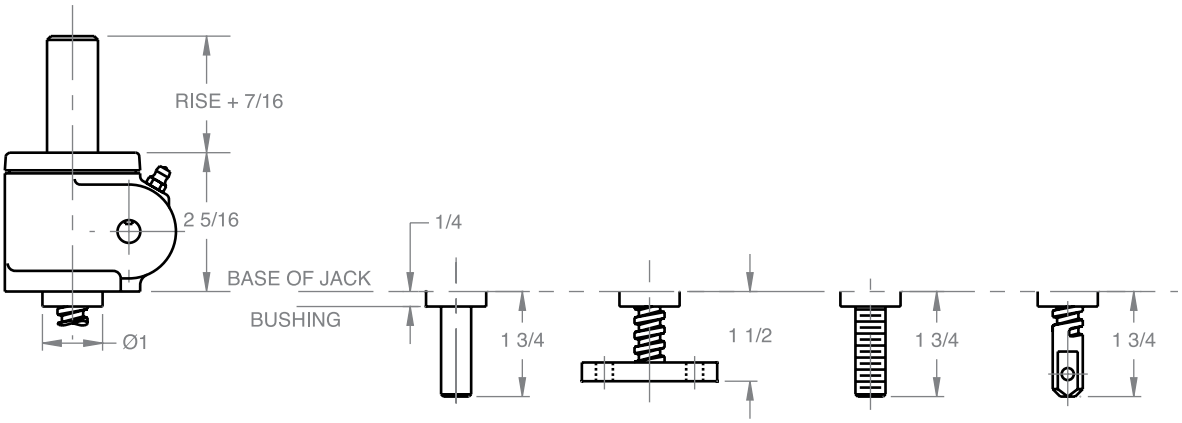

Material Notes: Housing and protection tube are aluminum. Lifting screw is 304 S.S., Input shaft (worm) is 416 S.S.

Note: Drawings are artist's conception — not for certification; dimensions are subject to change without notice.

MACHINE SCREW JACKS

500 POUND - 5/8" SCREW

WJ 500

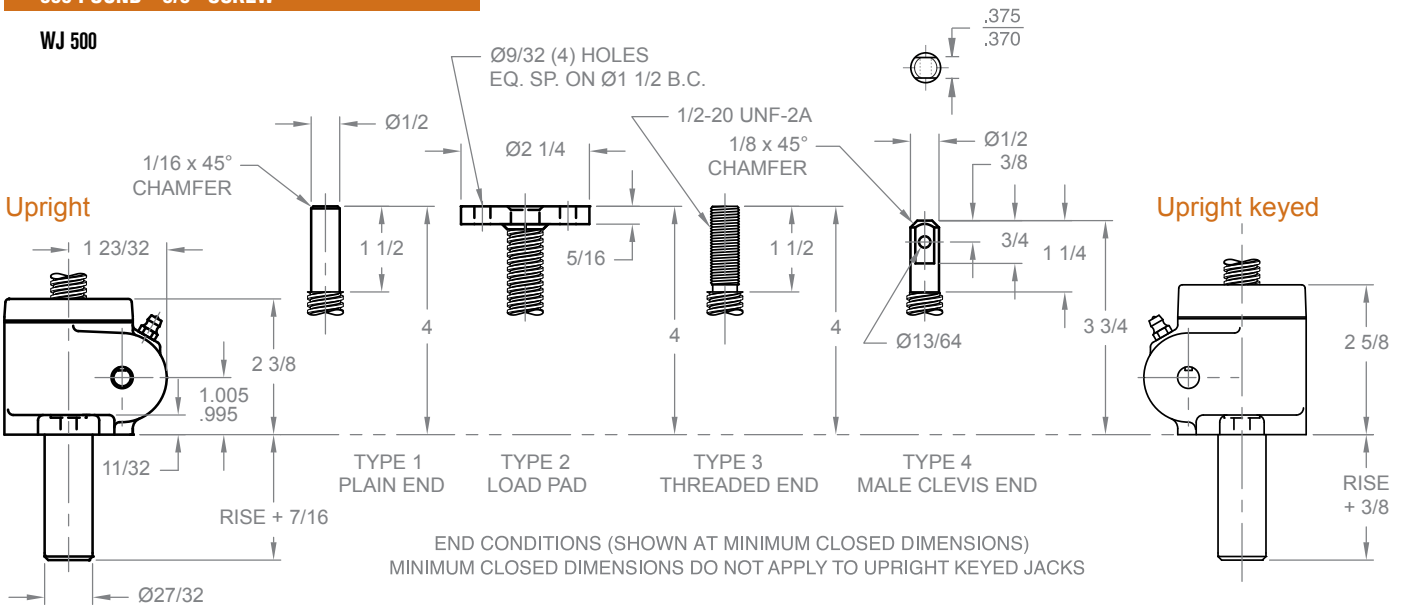

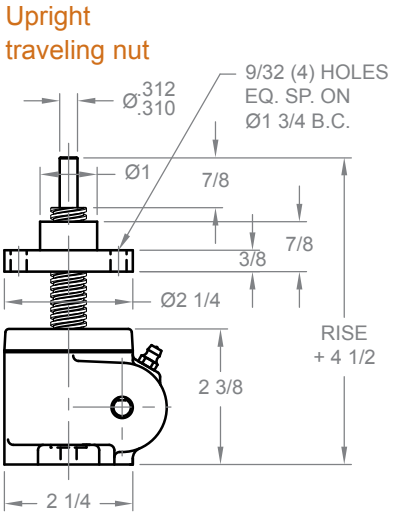

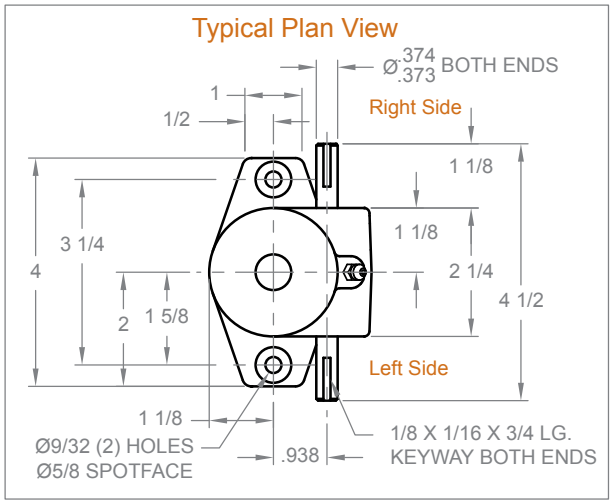

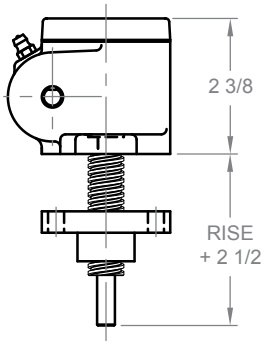

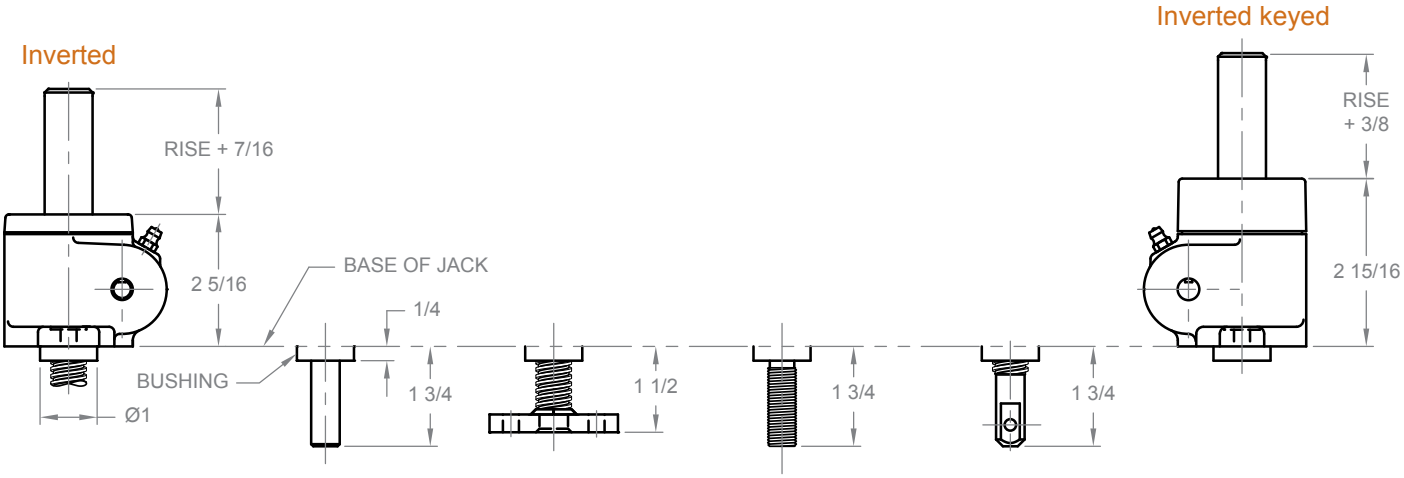

Material Notes: Housing and protection tube are aluminum. Lifting screw is 304 S.S. Input shaft (worm) is 416 S.S.

Note: Drawings are artist's conception - not for certification; dimensions are subject to change without notice.

MACHINE SCREW JACKS

1000 POUND - 5/8" SCREW

WJ 1000

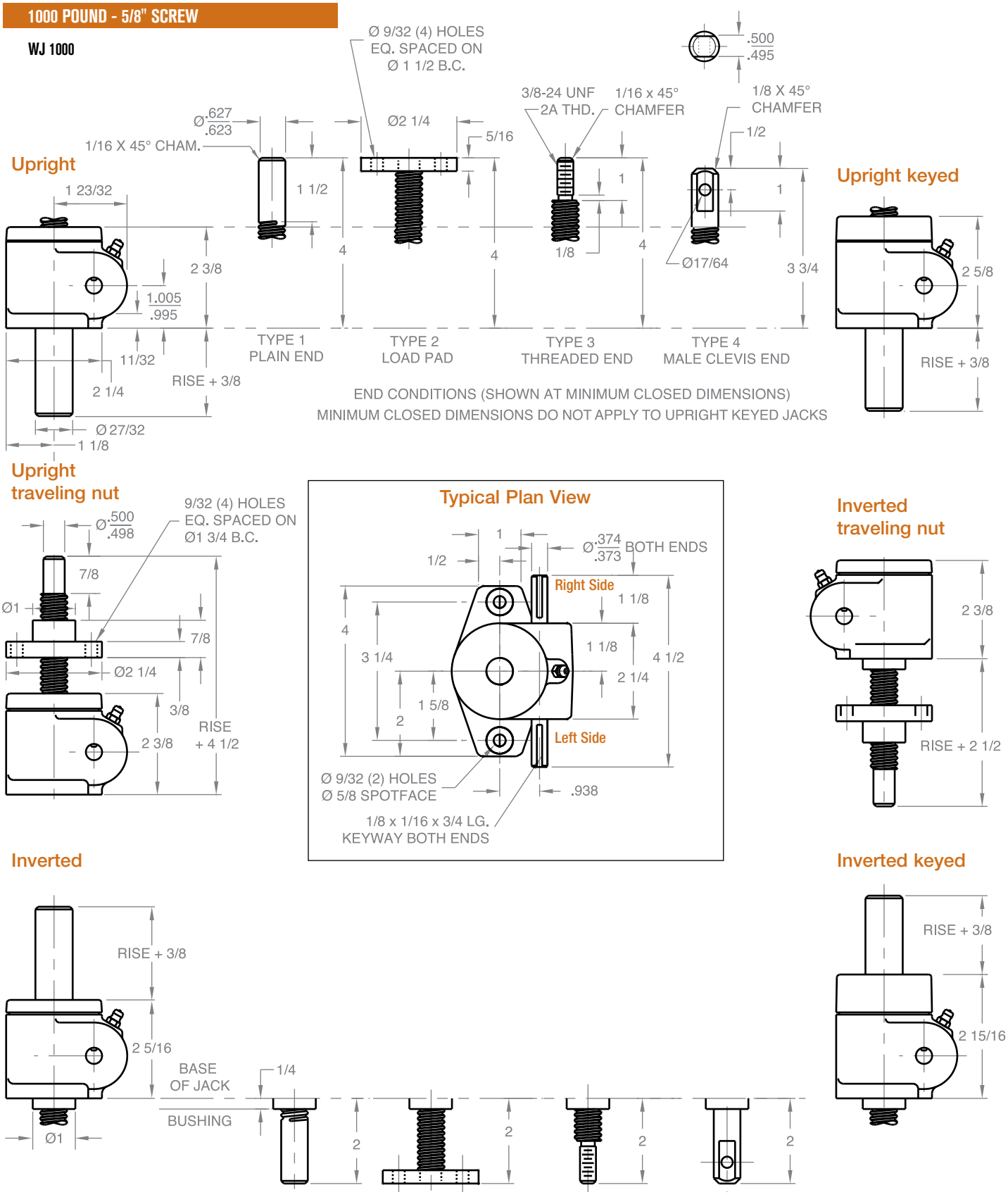

Material Notes: Housing and protection tube are aluminum. Lifting screw is 304 S.S. Input shaft (worm) is 416 S.S.

Note: Drawings are artist's conception — not for certification; dimensions are subject to change without notice.

MACHINE SCREW JACKS

1 TON - 3/4" SCREW

WJ 51 / WJ 201

Upright

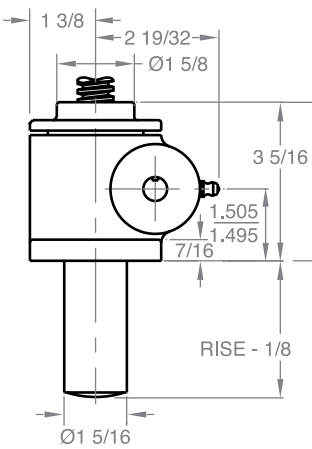

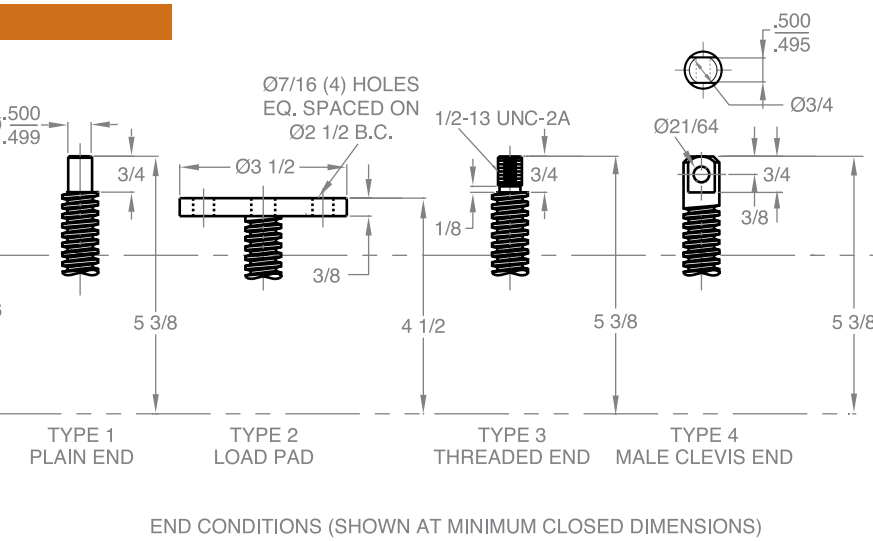

Upright keyed

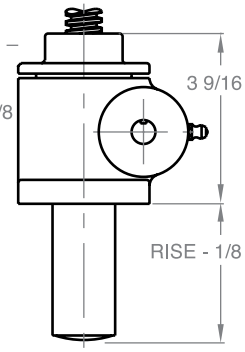

Upright traveling nut

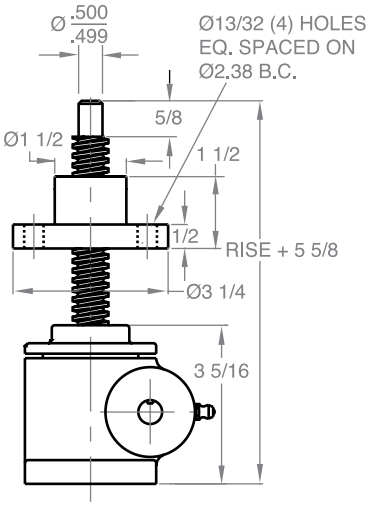

Typical Plan View

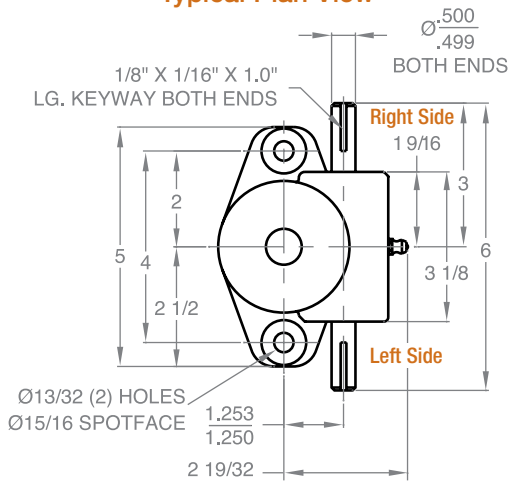

Inverted traveling nut

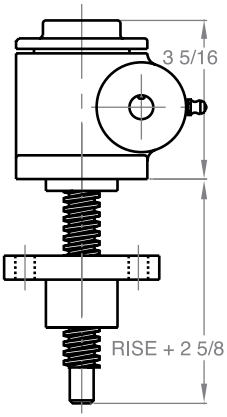

Inverted

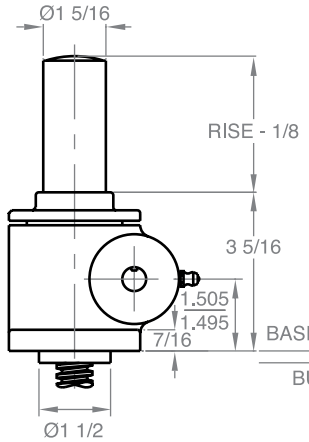

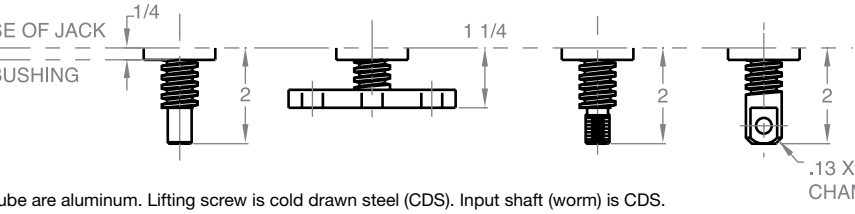

Inverted keyed

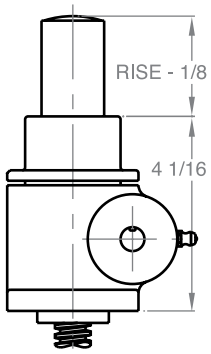

Material Notes: Housing and protection tube are aluminum. Lifting screw is cold drawn steel (CDS). Input shaft (worm) is CDS.

Note: Drawings are artist's conception — not for certification; dimensions are subject to change without notice.

MACHINE SCREW JACKS

2 TON - 1" SCREW

WJT 62 / DWJ 62
WJT 122 / DWJ 122
WJT 242 / DWJ 242
WJT 252

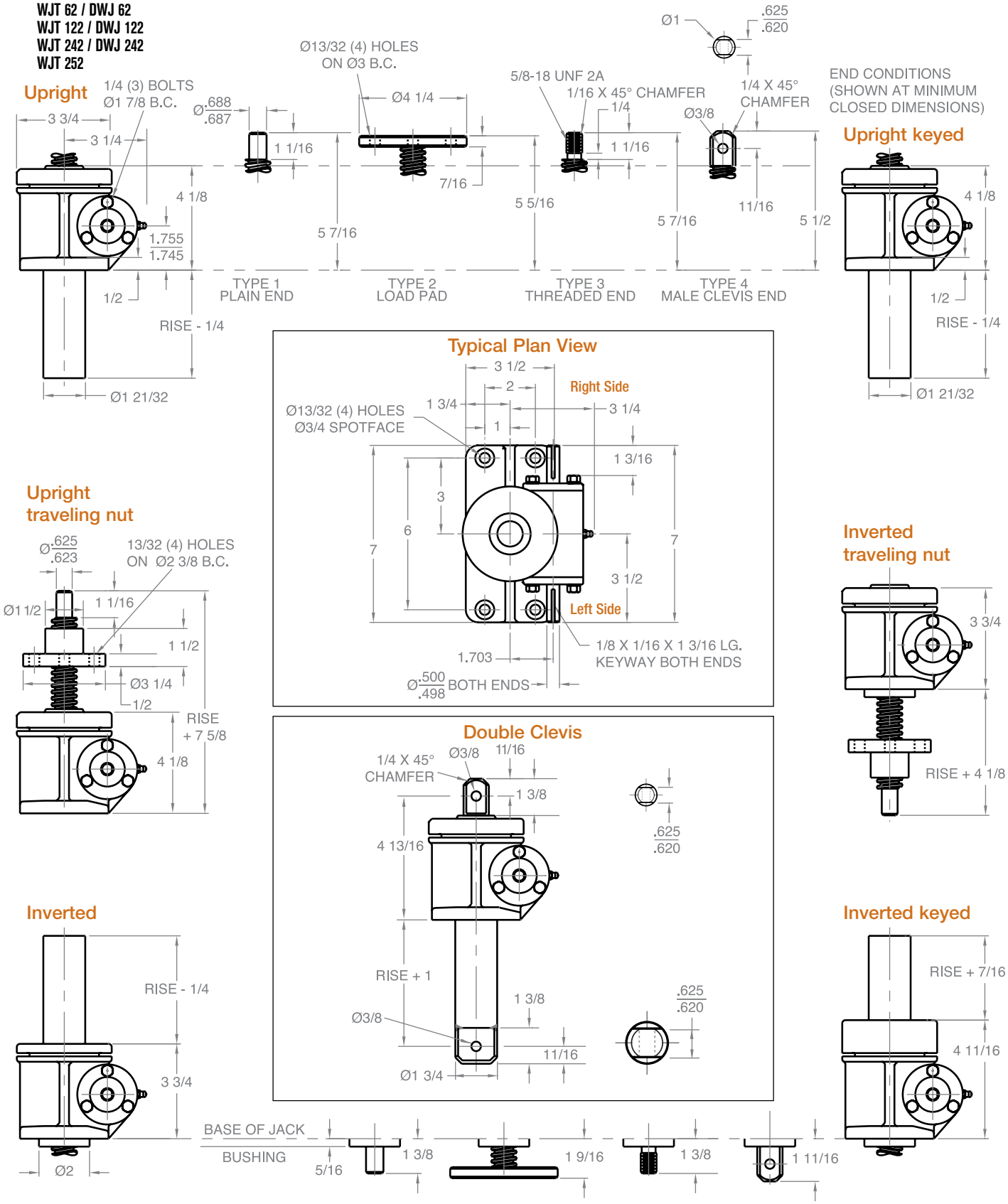

Note: Drawings are artist's conception — not for certification; dimensions are subject to change without notice.

MACHINE SCREW JACKS

2 TON REVERSE BASE - 1" SCREW

RWJT 62 / DRWJ 62
RWJT 122 / DRWJ 122
RWJT 242 / DRWJ 242
RWJT 252

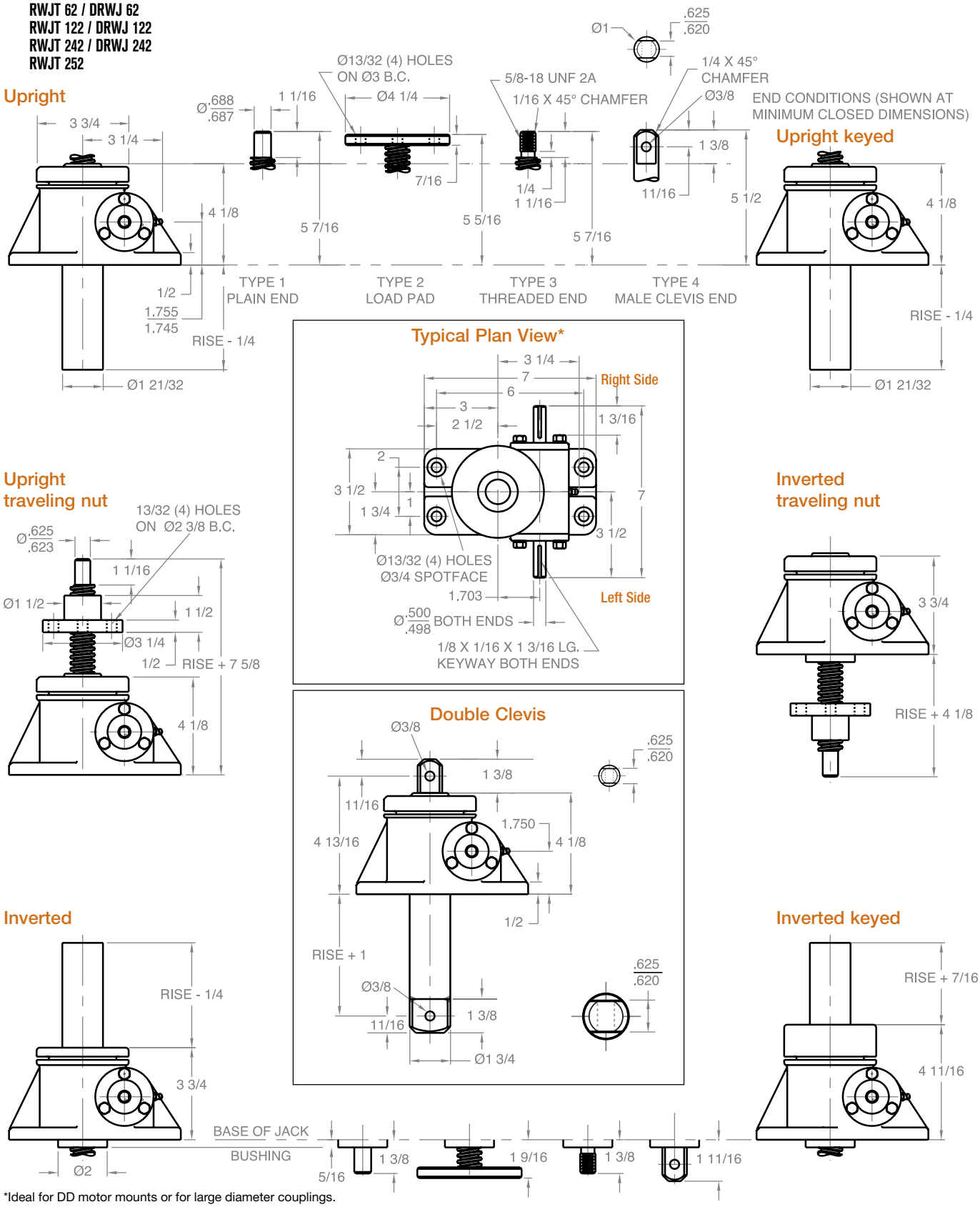

*Ideal for DD motor mounts or for large diameter couplings.

Note: Drawings are artist's conception — not for certification; dimensions are subject to change without notice.

MACHINE SCREW JACKS

3 TON - 1" SCREW

WJ 63 / WJ 123 / WJ 243 / WJ 253
DWJ 63 / DWJ 123 / DWJ 243

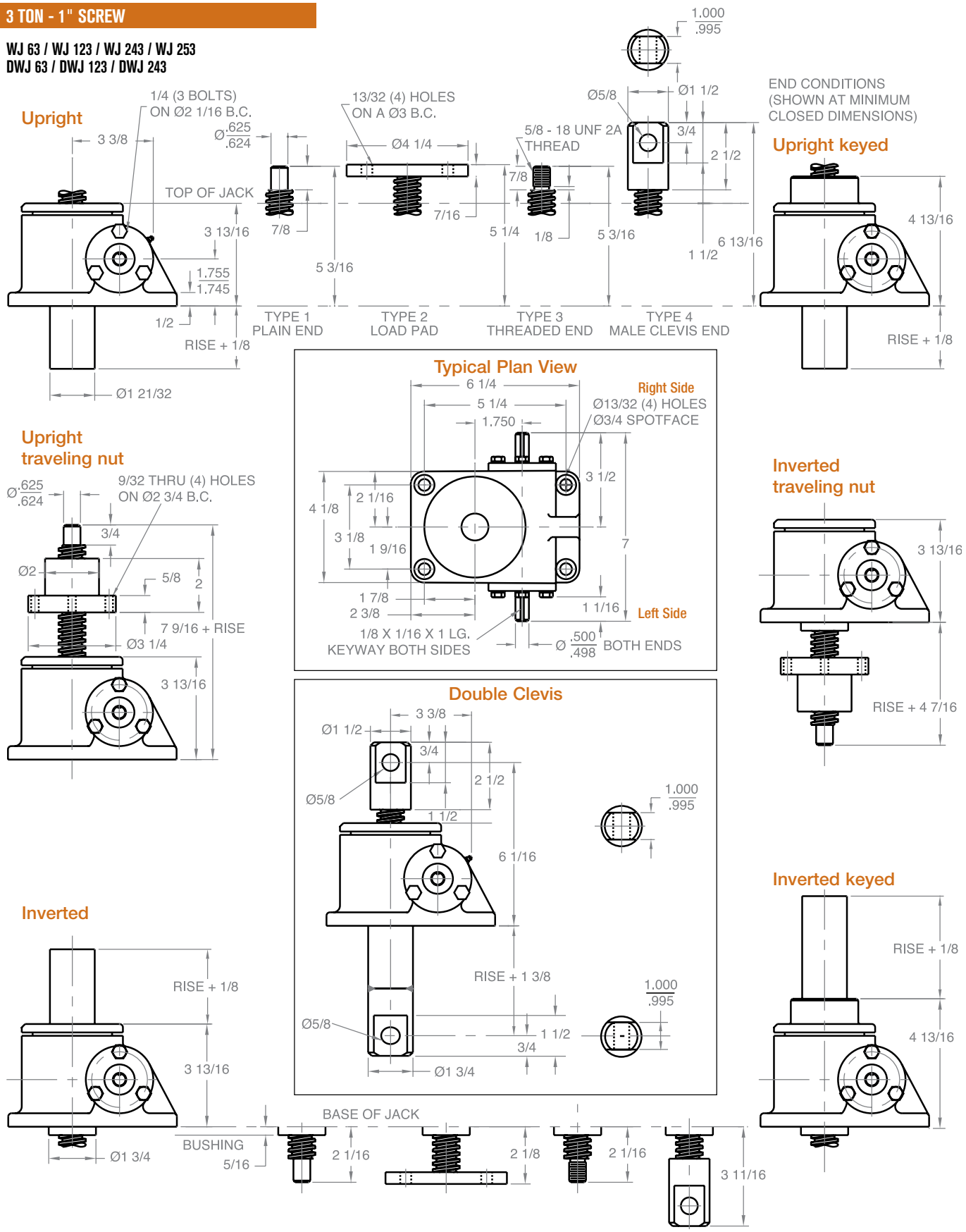

Note: Drawings are artist's conception — not for certification; dimensions are subject to change without notice. Minimum closed dimensions do not apply to upright keyed jacks.

MACHINE SCREW JACKS

5 TON - 1 1/2" SCREW

WJT 65 / DWJ 65
WJT 125 / DWJ 125
WJT 245 / DWJ 245
WJT 255

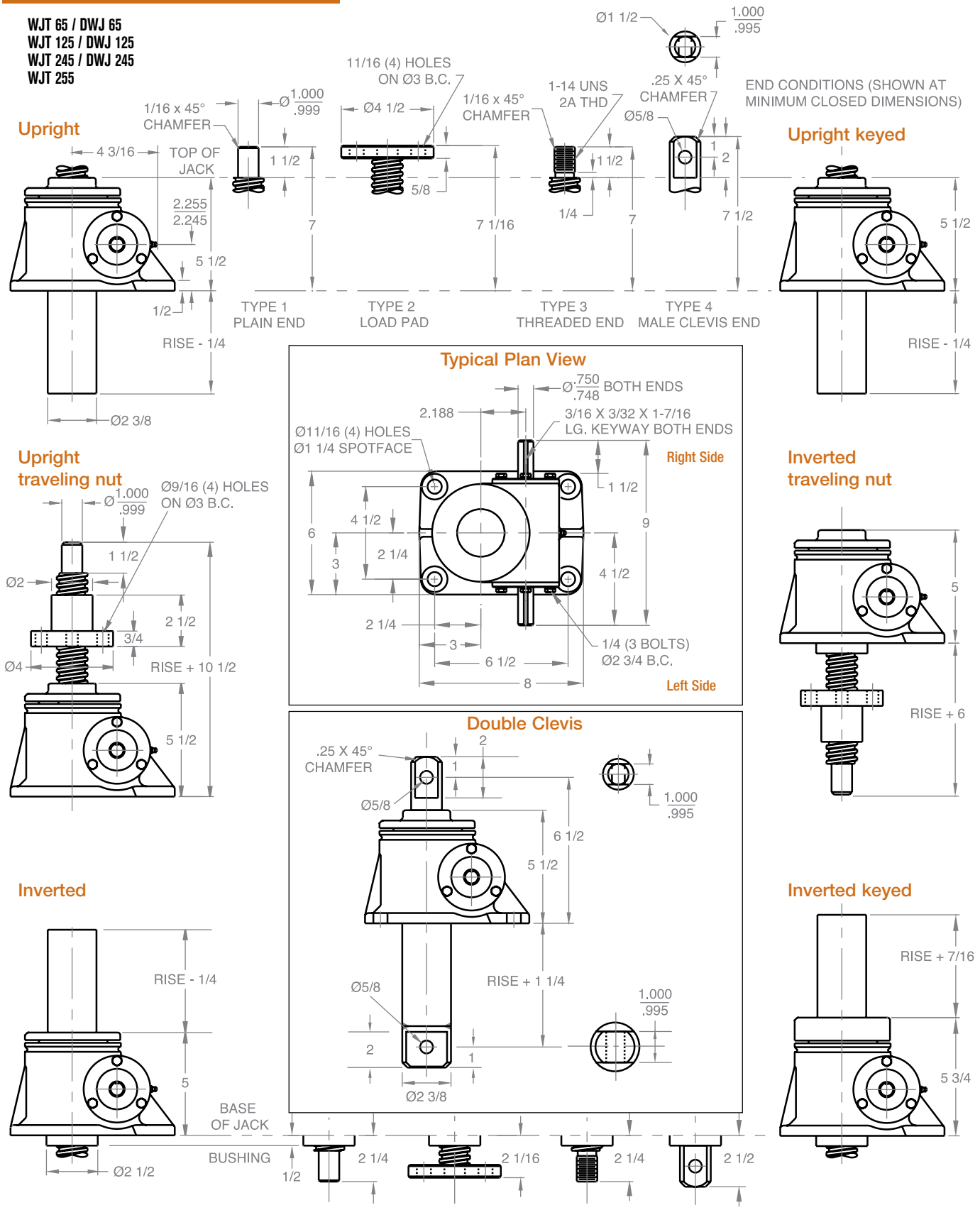

Note: Drawings are artist's conception — not for certification; dimensions are subject to change without notice.

MACHINE SCREW JACKS

10 TON - 2" SCREW

WJ 810 / DWJ 810
WJ 2410 / DWJ 2410
WJ 2510

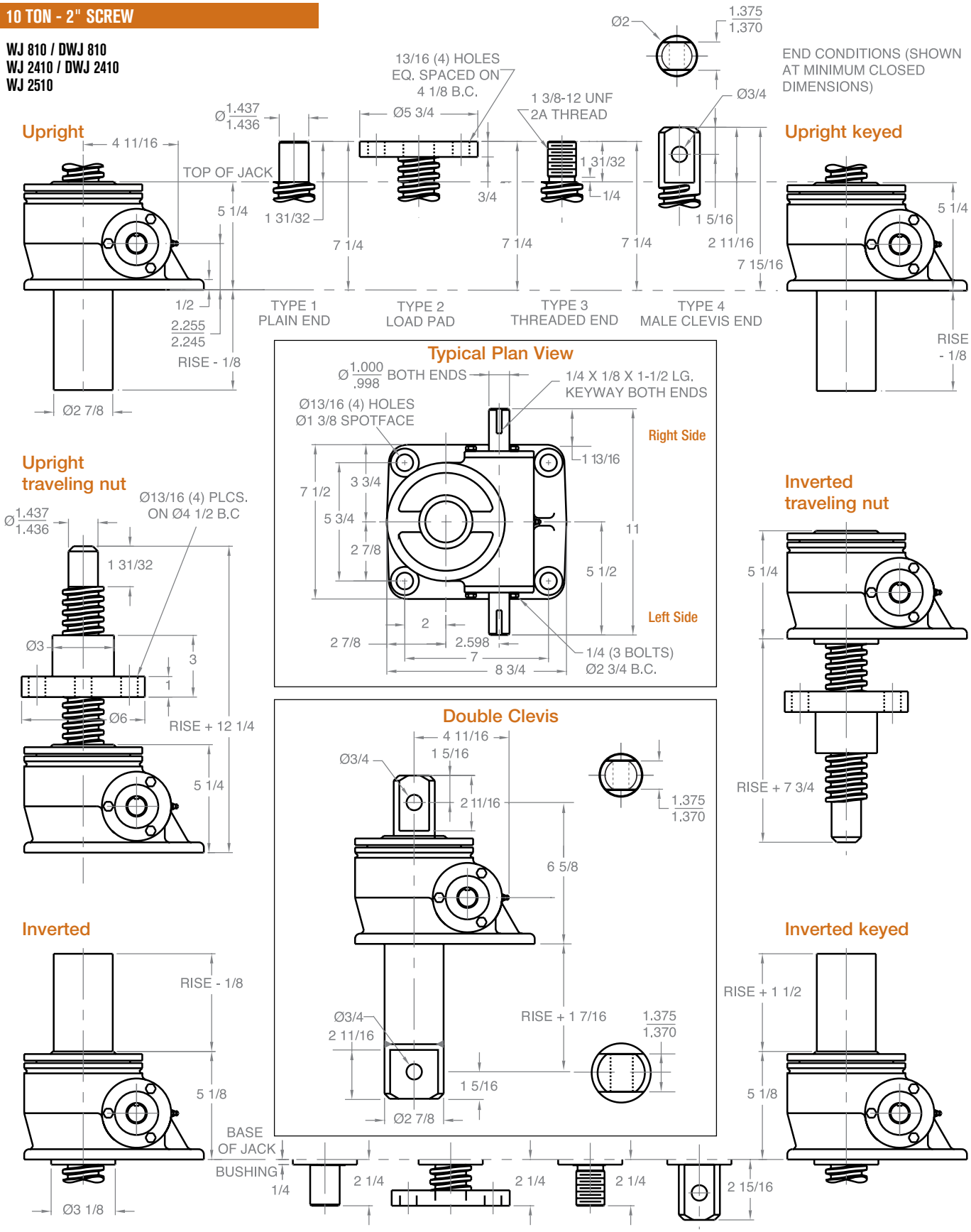

Note: Drawings are artist's conception — not for certification; dimensions are subject to change without notice.

MACHINE SCREW JACKS

15 TON - 2 1/4" SCREW

WJ 815 / DWJ 815
WJ 2415 / DWJ 2415
WJ 2515

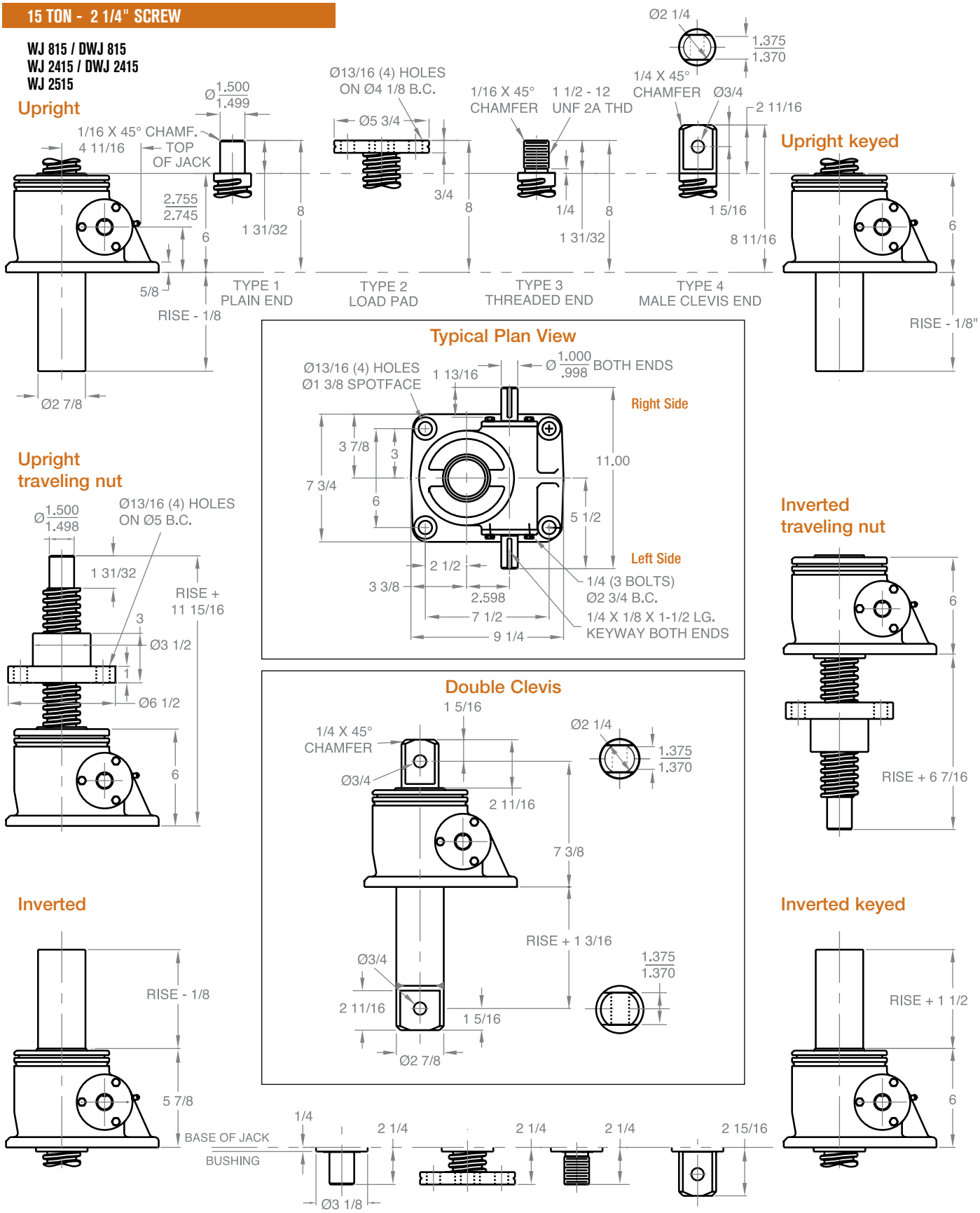

Note: Drawings are artist's conception — not for certification; dimensions are subject to change without notice.

MACHINE SCREW JACKS

20 TON - 2 1/2" SCREW

WJ 820 / DWJ 820
WJ 2420 / DWJ 2420
WJ 2520

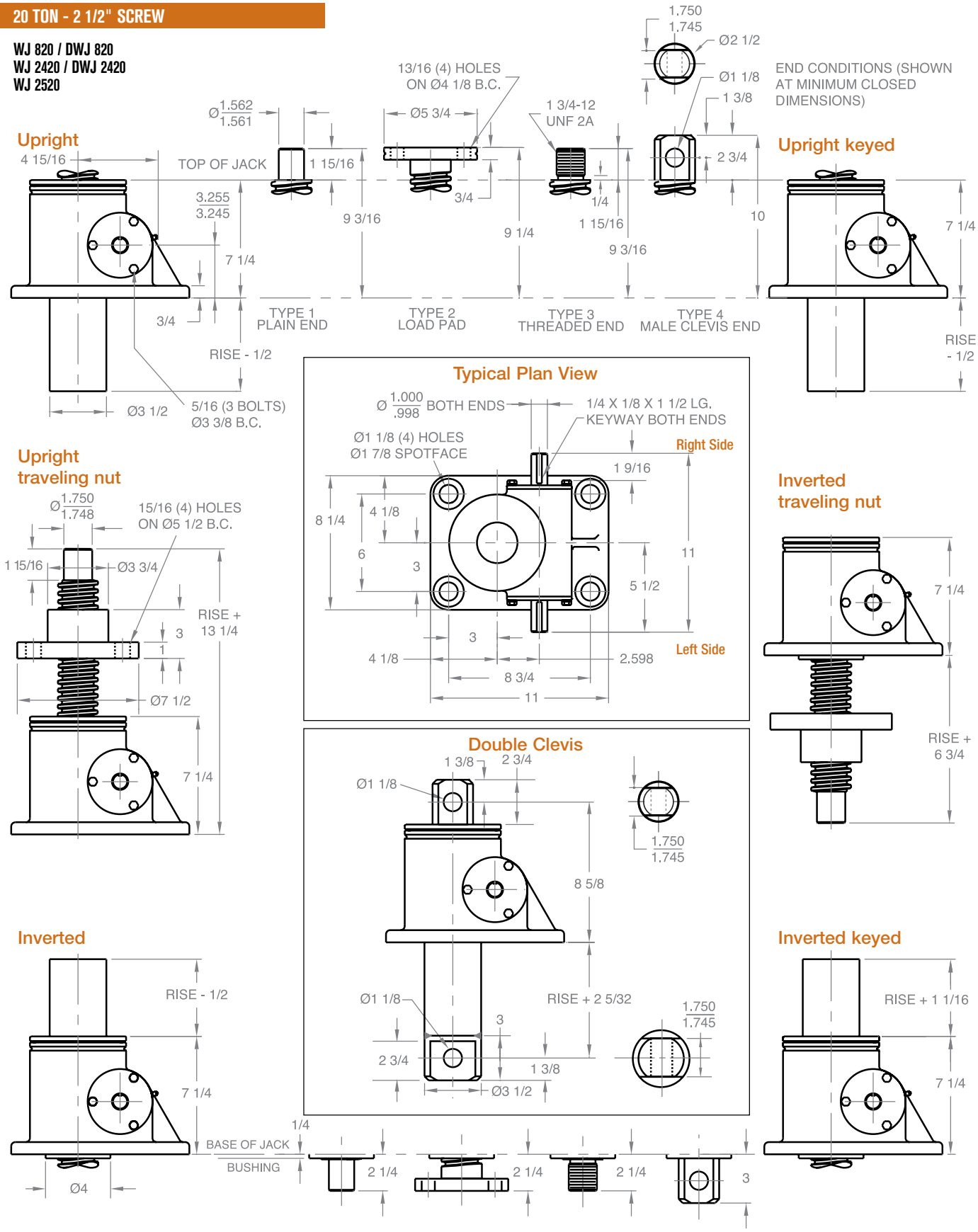

Note: Drawings are artist's conception — not for certification; dimensions are subject to change without notice.

MACHINE SCREW JACKS

25 TON - 3 3/8" SCREW

WJ 1125 / DWJ 1125
WJ 3225 / DWJ 3225

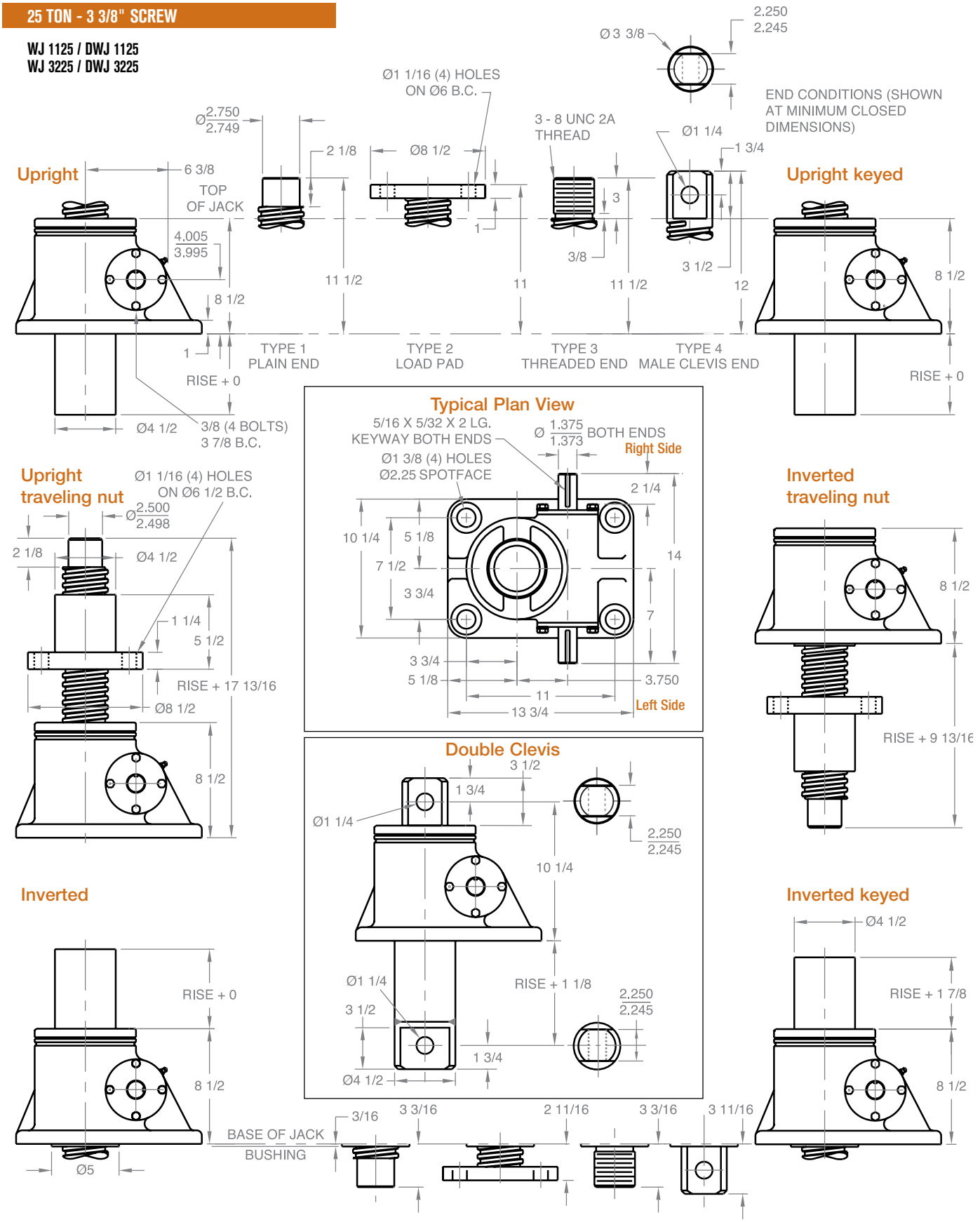

Note: Drawings are artist's conception — not for certification; dimensions are subject to change without notice.

MACHINE SCREW JACKS

30 TON - 3 1/2" SCREW

WJ 1130 / DWJ 1130
WJ 3230 / DWJ 3230

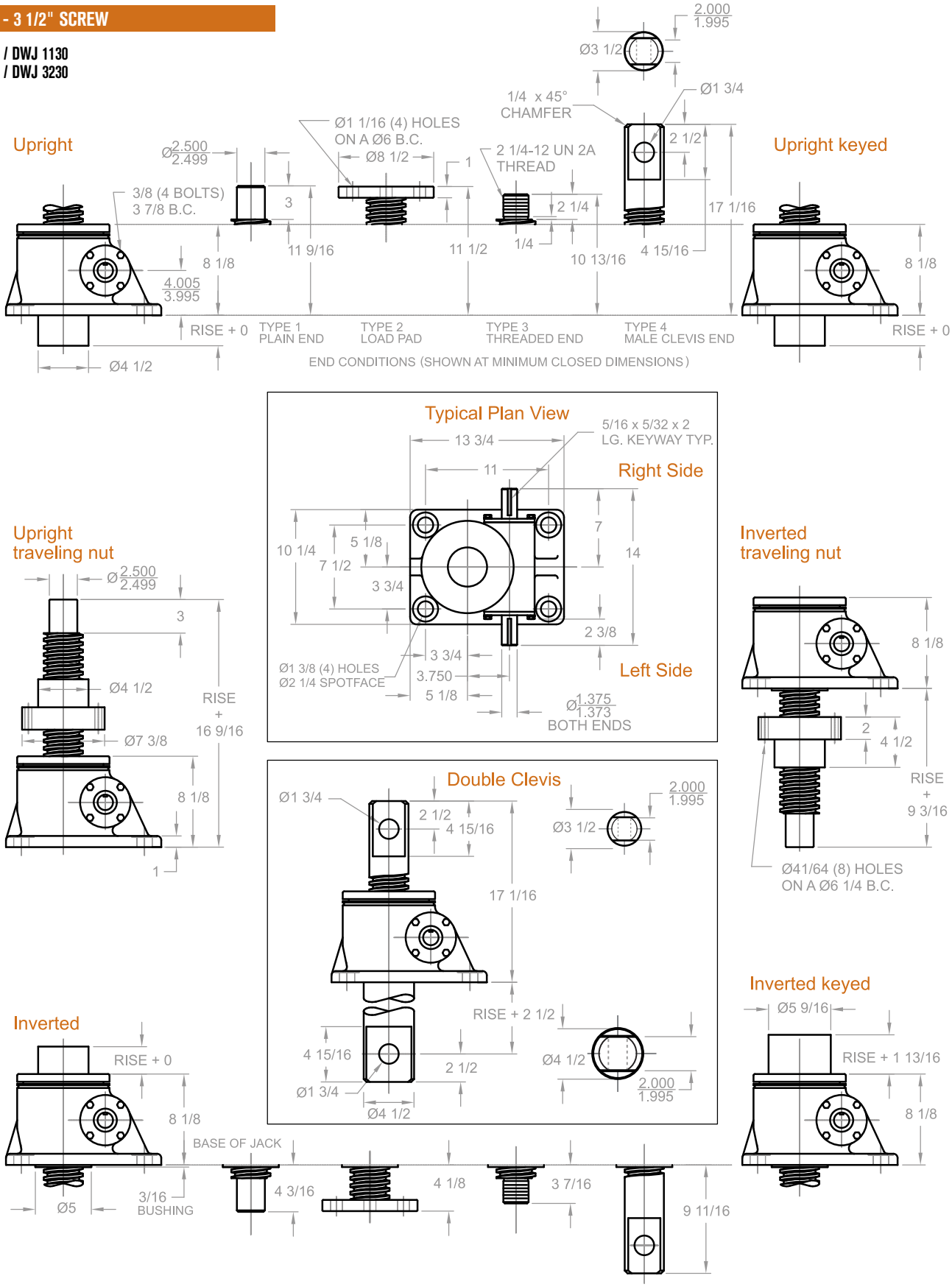

Note: Drawings are artist's conception — not for certification; dimensions are subject to change without notice.

MACHINE SCREW JACKS

35 TON - 3 3/4" SCREW

WJ 1135
WJ 3235

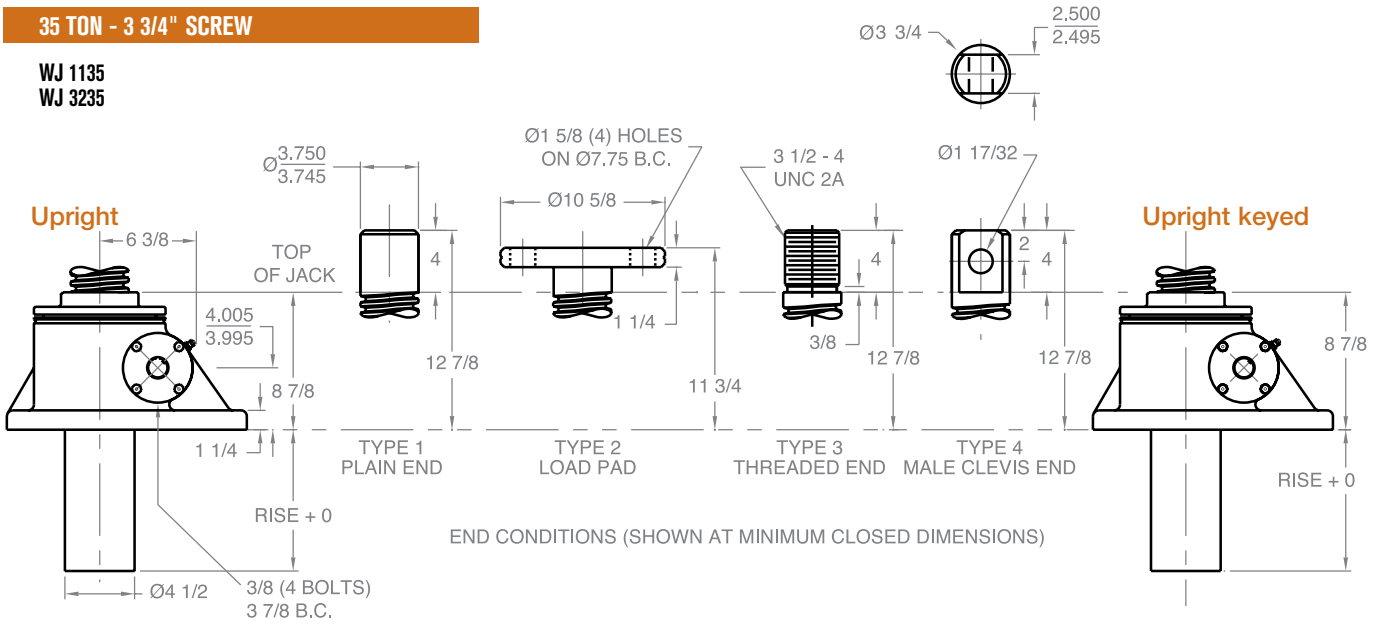

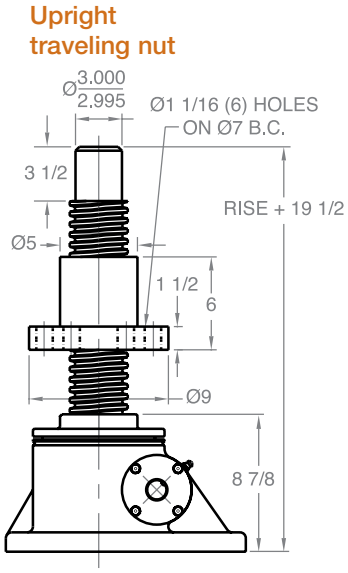

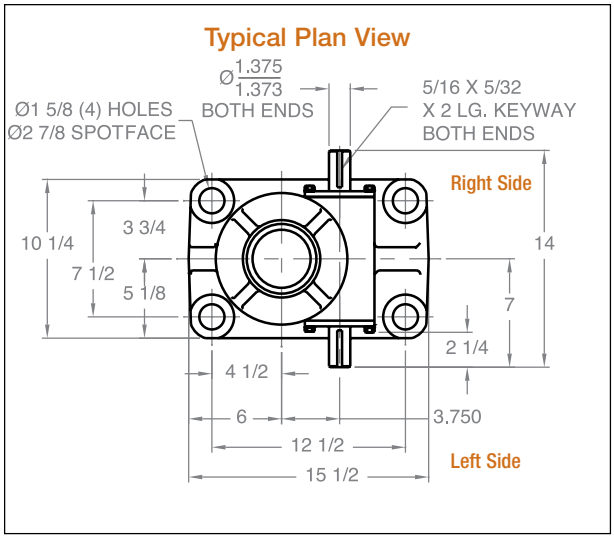

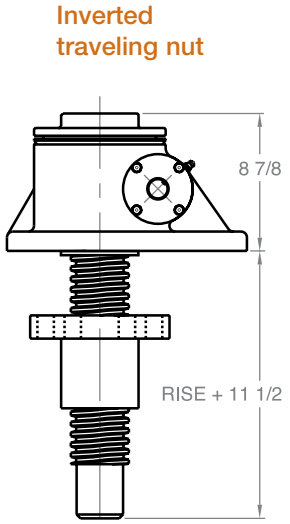

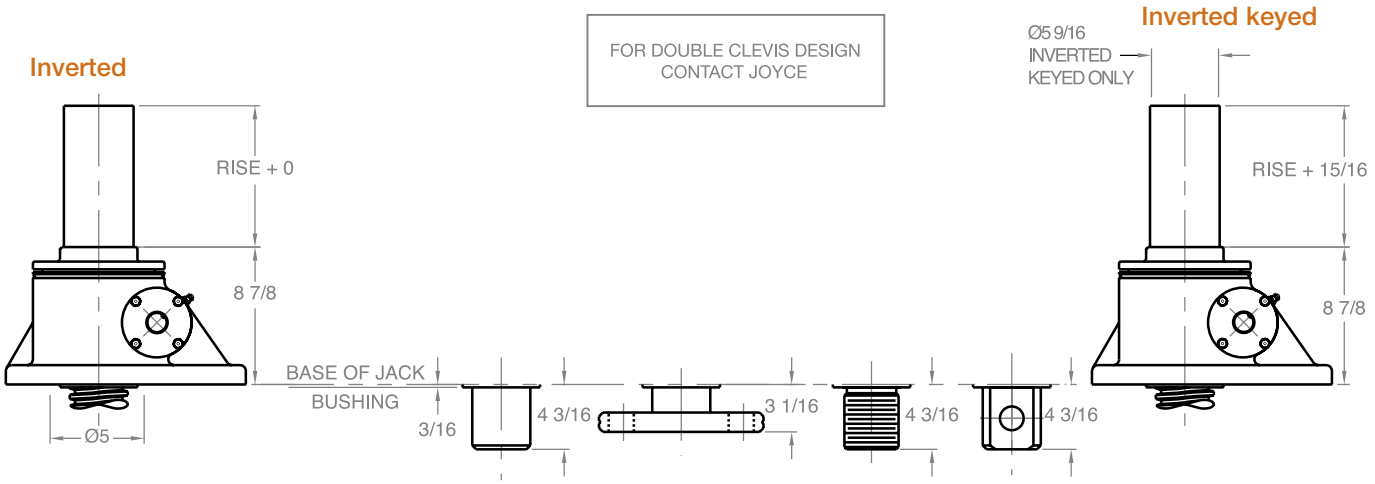

Note: Drawings are artist's conception — not for certification; dimensions are subject to change without notice.

MACHINE SCREW JACKS

50 TON - 4 1/2" SCREW

WJT 1150
WJT 3250

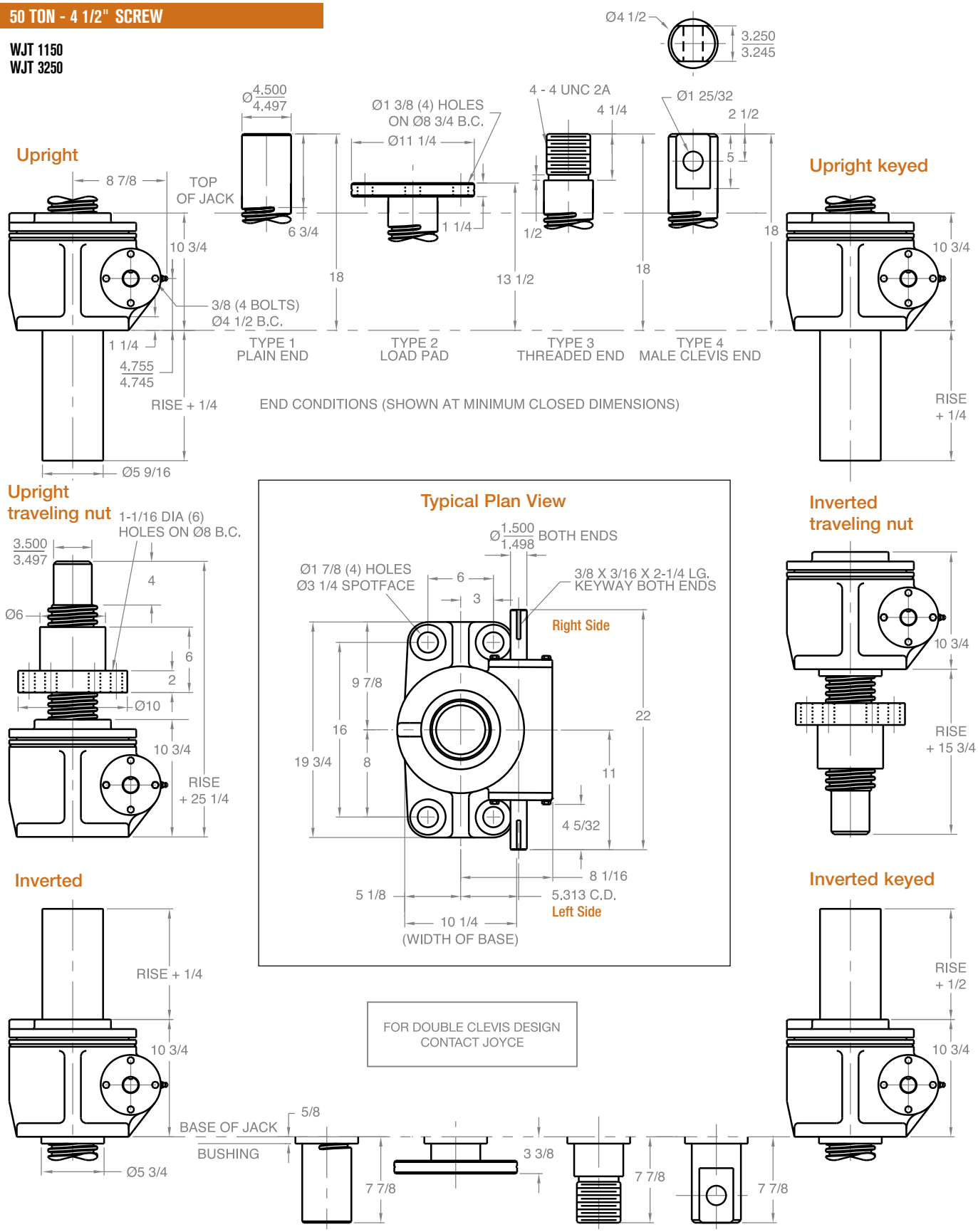

Note: Drawings are artist's conception — not for certification; dimensions are subject to change without notice.

MACHINE SCREW JACKS

50 TON REVERSE BASE - 4 1/2" SCREW

RWJT 1150
RWJT 3250

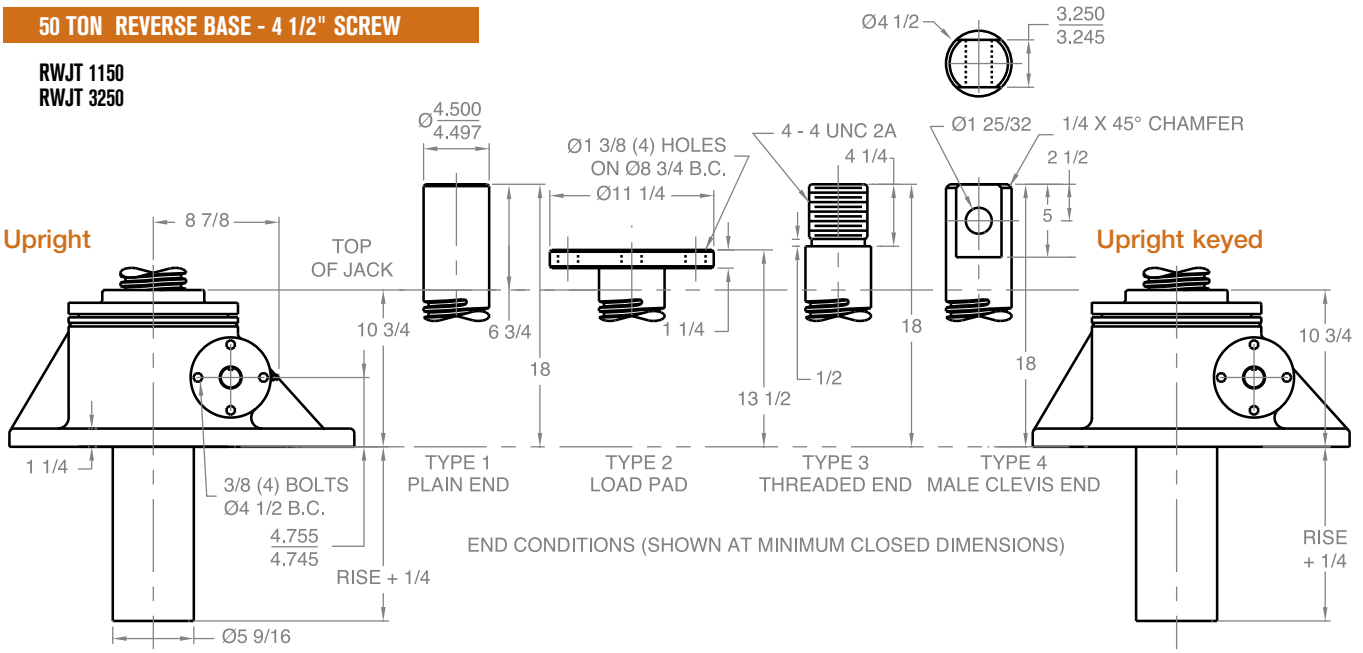

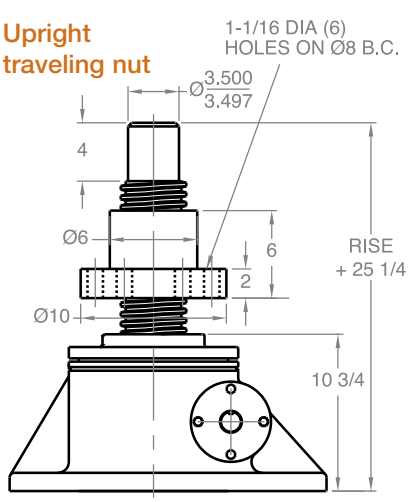

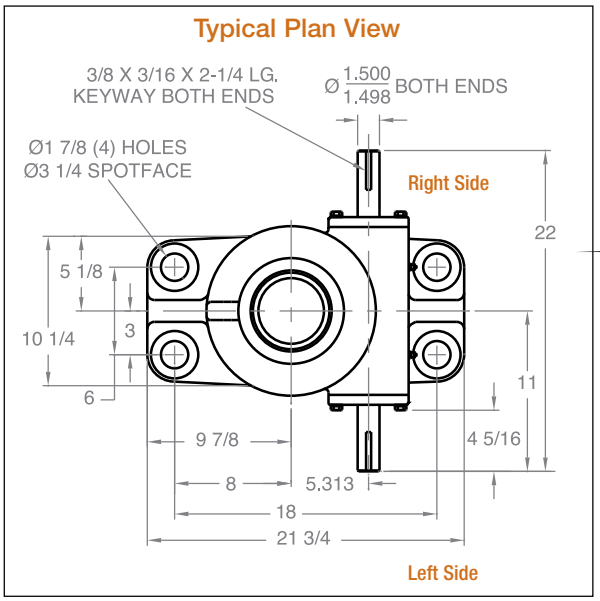

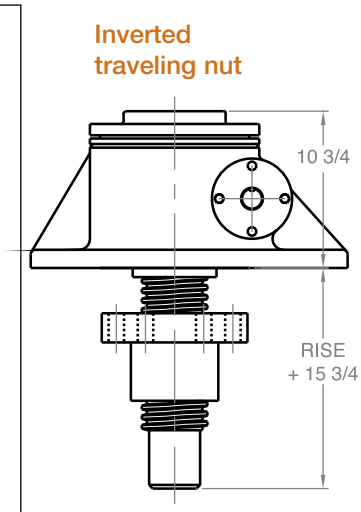

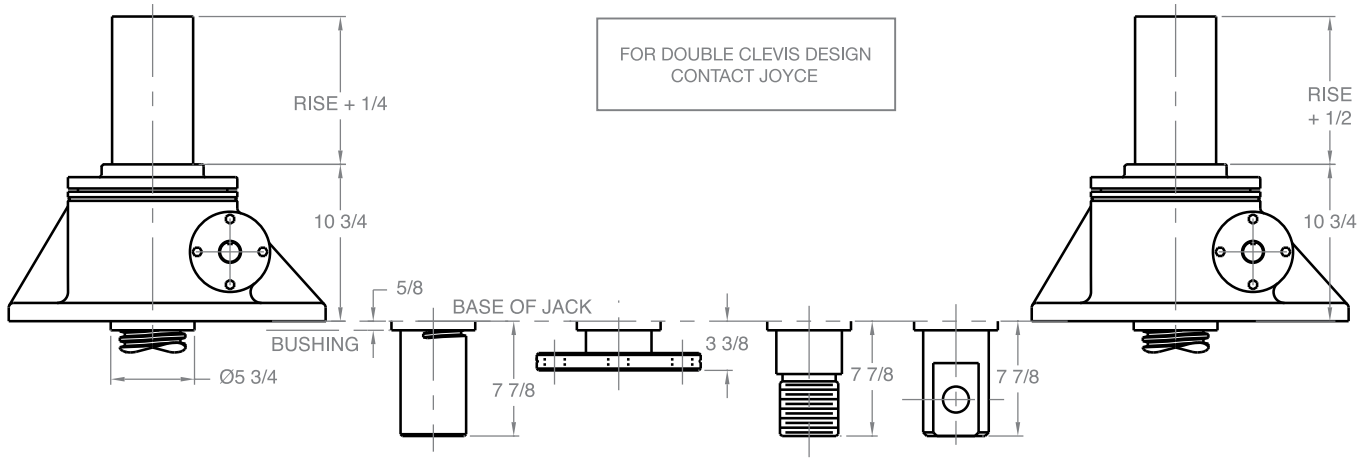

FOR DOUBLE CLEVIS DESIGN CONTACT JOYCE

Note: Drawings are artist's conception — not for certification; dimensions are subject to change without notice.

MACHINE SCREW JACKS

75 TON - 5" SCREW

WJ 1175
WJ 3275

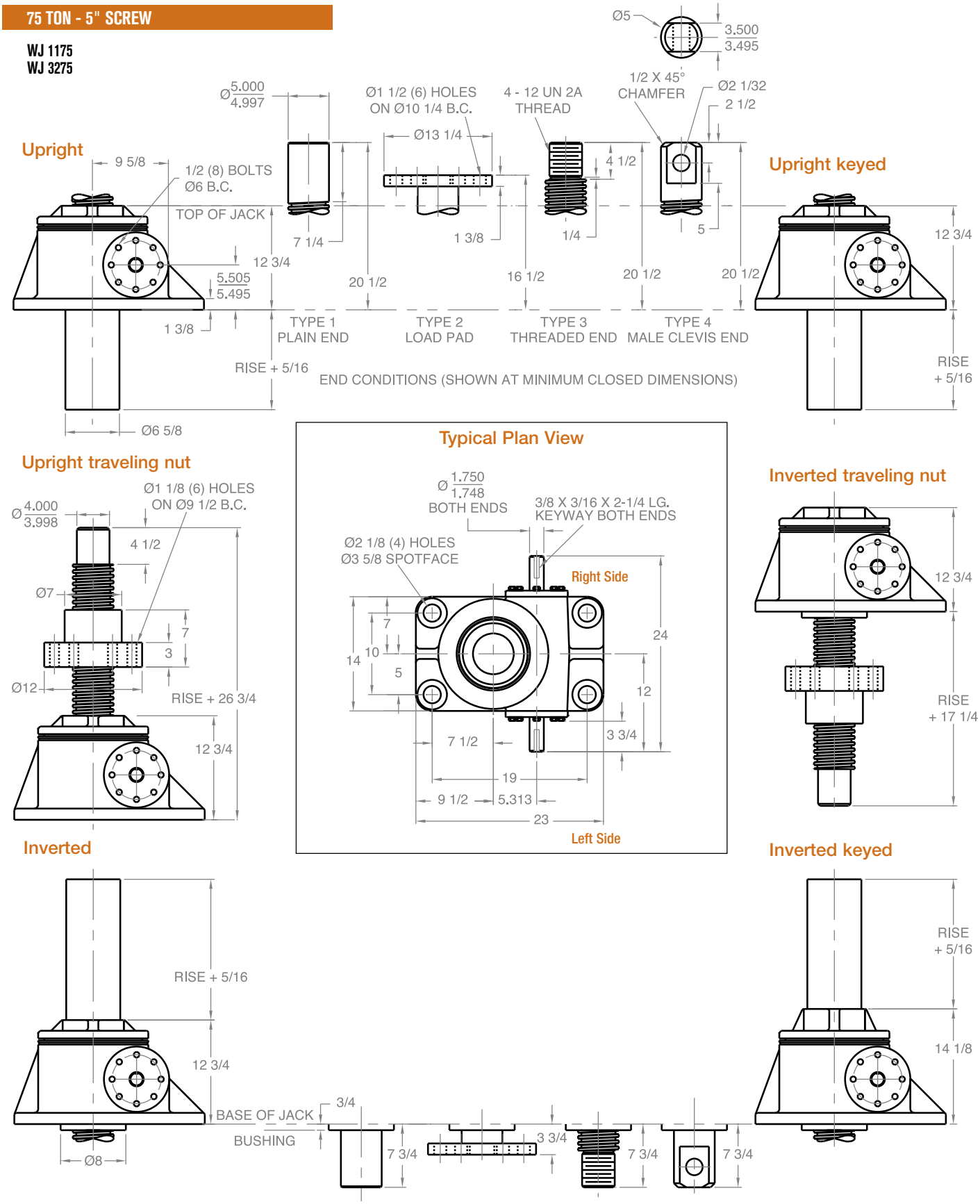

Note: Drawings are artist's conception — not for certification; dimensions are subject to change without notice.

MACHINE SCREW JACKS

100 TON - 6" SCREW

WJ 12100
WJ 36100

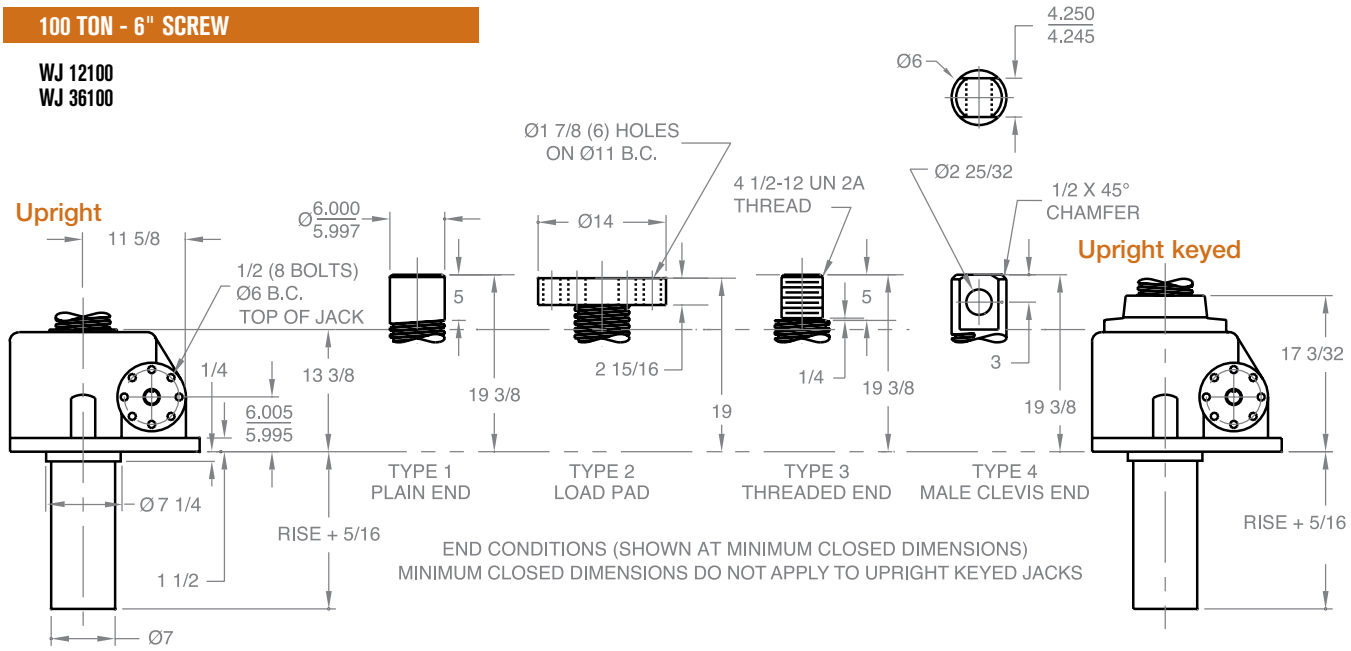

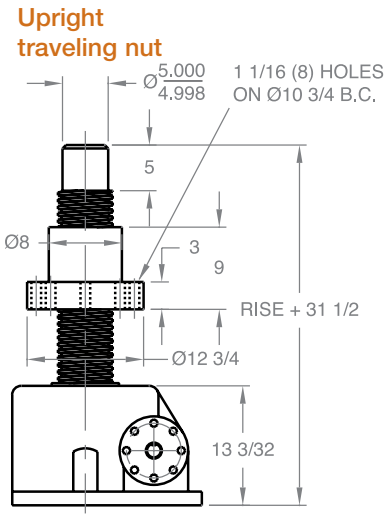

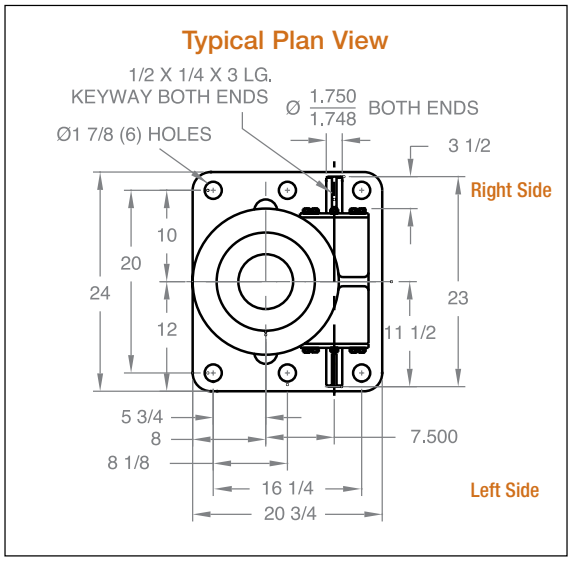

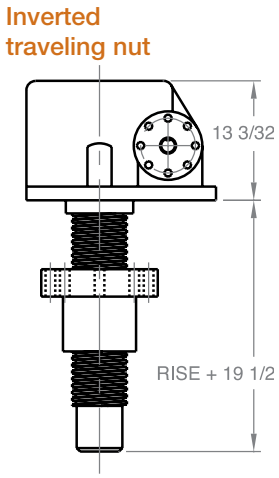

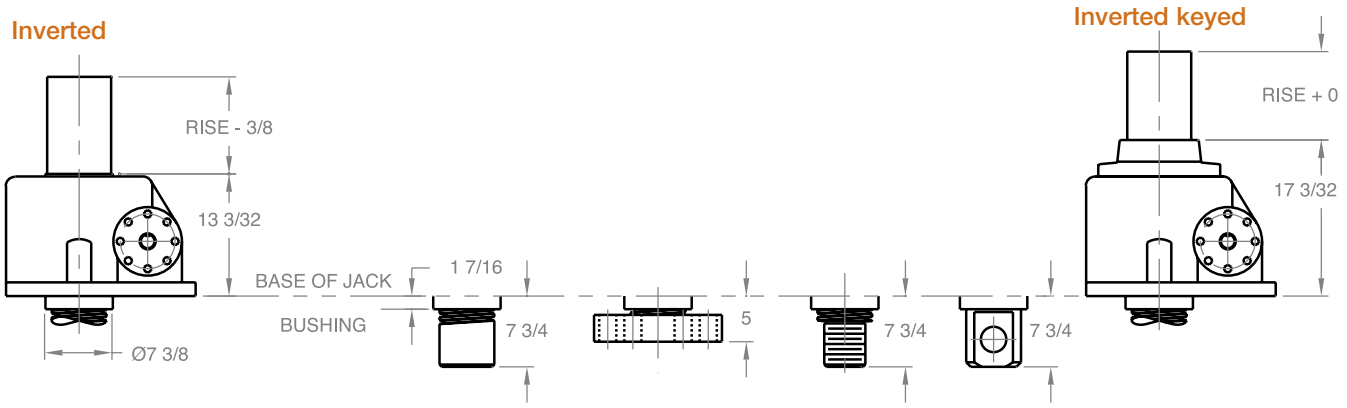

Note: Drawings are artist's conception — not for certification; dimensions are subject to change without notice. Minimum closed dimensions do not apply to upright keyed jacks.

MACHINE SCREW JACKS

150 TON - 7" SCREW

WJ 12150
WJ 36150

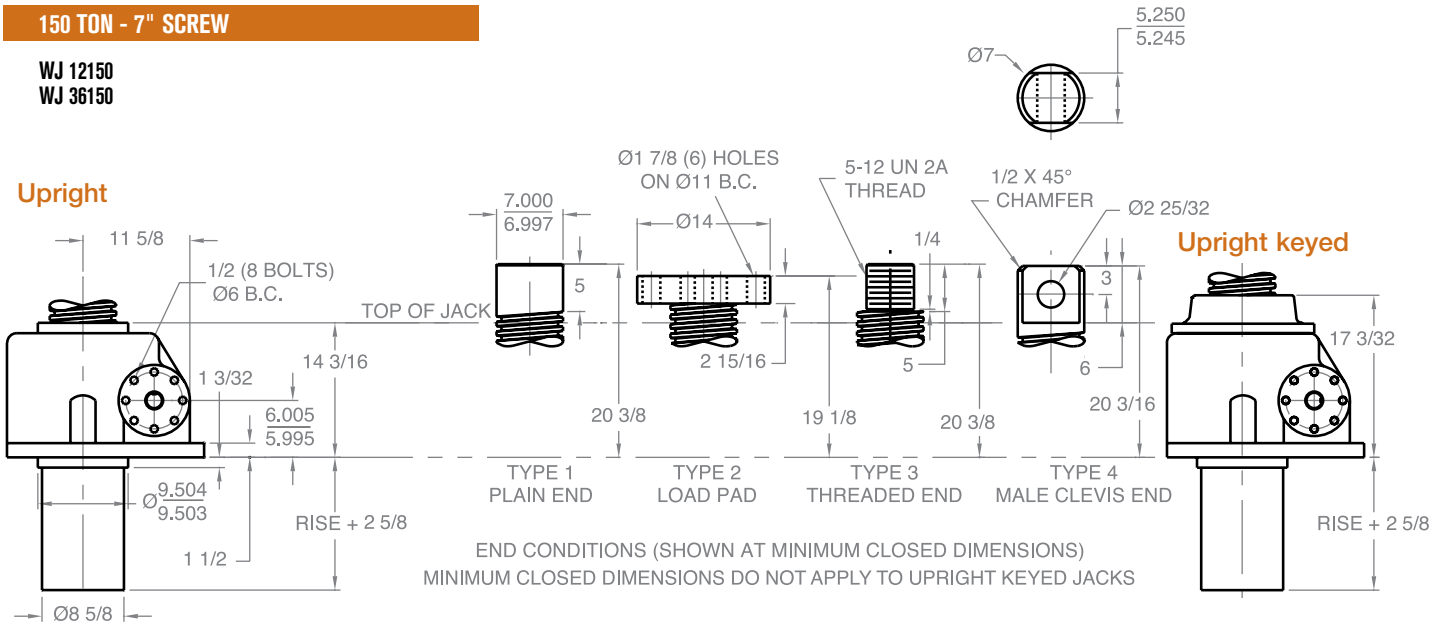

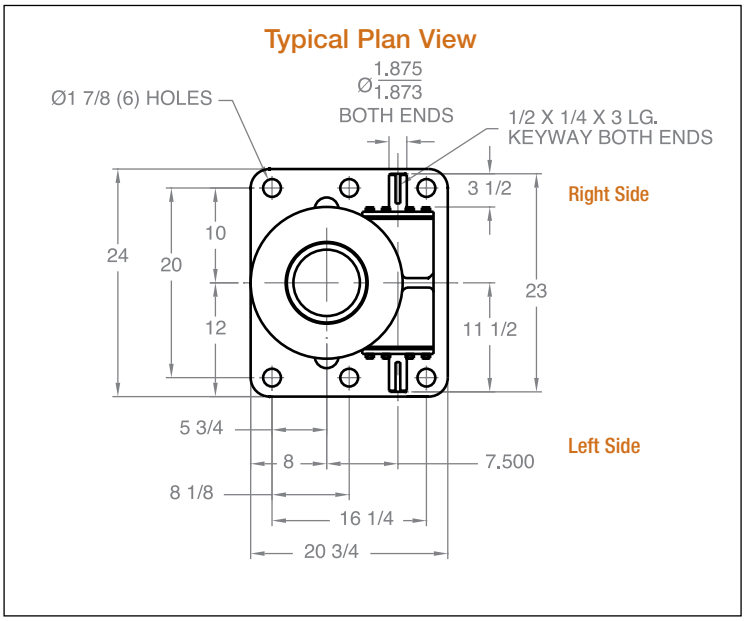

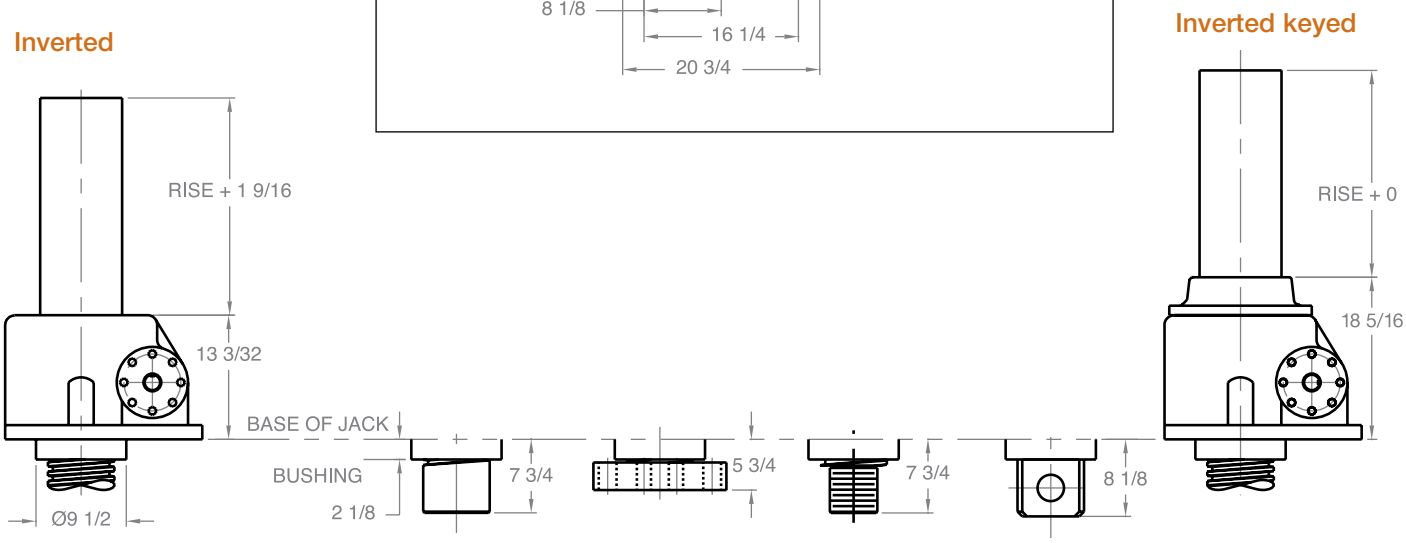

Note: Drawings are artist's conception — not for certification; dimensions are subject to change without notice. Minimum closed dimensions do not apply to upright keyed jacks.

MACHINE SCREW JACKS

250 TON - 9" SCREW

WJ 50250

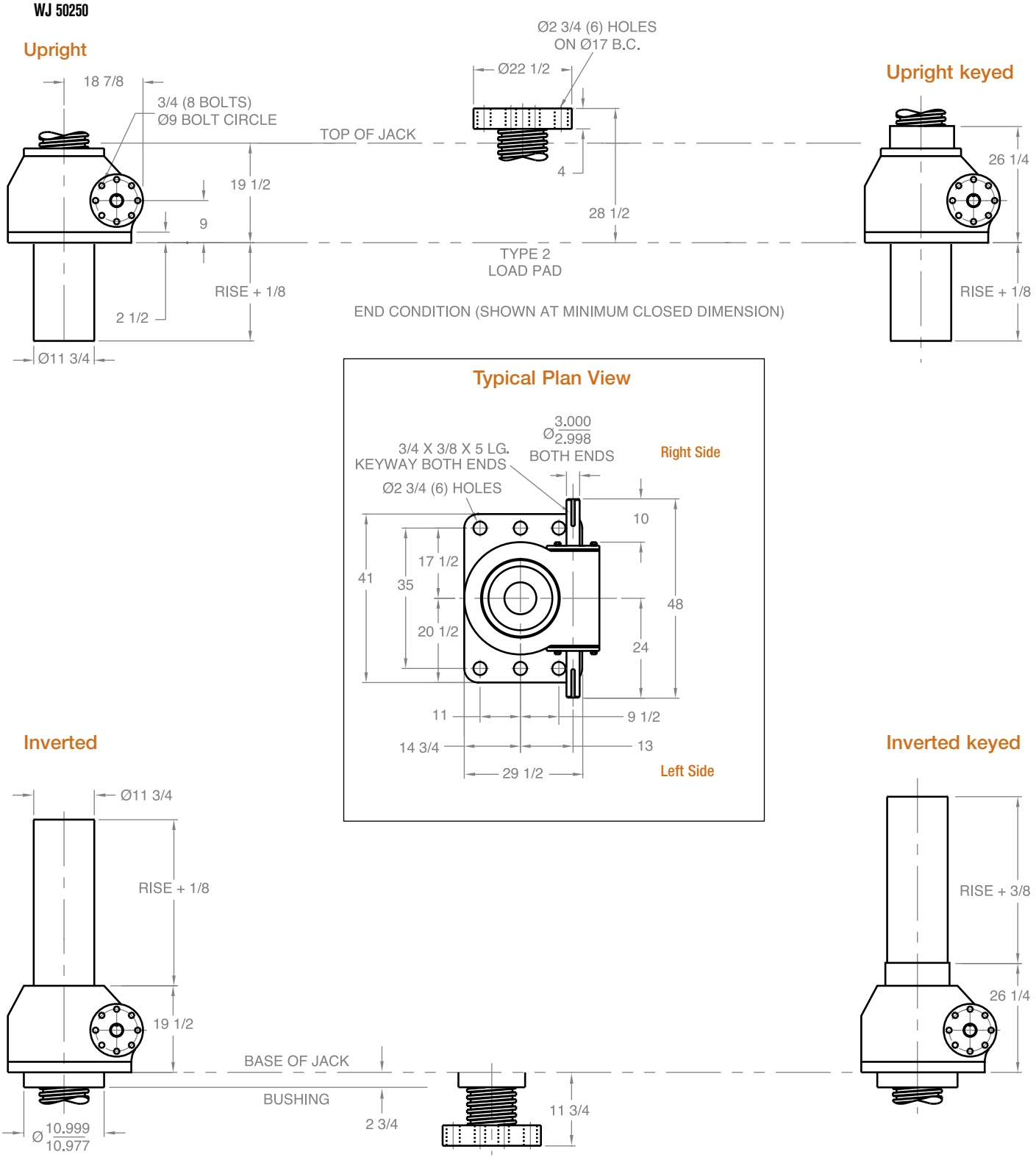

Note: Drawings are artist's conception — not for certification; dimensions are subject to change without notice. Minimum closed dimensions do not apply to upright keyed jacks.